Ultrastore Rapid

Gas and Electric
Storage Water Heater

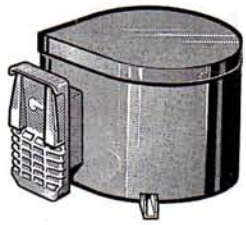

(S) Bruks- och monteringsanvisningar på svenska kan rekvireras från tillverkaren Truma eller från Truma-Service i Sverige.

(FIN) Käyttö- ja asennusohjeita on saatavissa Truma-valmistajalta tai Truma-huollosta.

(N) Bruksanvisningen og monteringsveiledningen på ditt språk kan fås hos produsenten Truma eller hos Truma-Service i ditt land.

(GR) Τις οδηγίες χρήσης και τοποθέτησης στη μητρική σας γλώσσα μπορείτε να τις λάβετε από τον κατασκευαστή Truma ή από το σέρβις Truma στη χώρα σας.

(P) Instruçöes de utilizaçaõ e de montagem podem ser solicitadas junto ao fabricante Truma ou da assistência técnica da Truma no seu país.

(CZ) (SK) Návod k použití a montáži ve svém jazyce obdržíte na požádání u firmy Truma nebo u jejího servisního zástupce ve vaší zemi.

(H) A magyar nyelvü használati és szerelési utasítást a gyártónál a Truma cégnél vagy a Truma magyarországi képviseleténél lehet beszerezni.

(PL) Instrukcję obsługi i montażu w ojczystym języku mogą Państwo dostać u producenta (Truma) lub w serwisie Trumy w swoim kraju.

(GB) **Operating instructions** **Page 2**
Installation instructions **Page 6**
To be kept in the vehicle!

(D) Die Gebrauchs- und Einbauanweisung in Ihrer Landessprache kann beim Hersteller Truma oder dem Truma-Service in Ihrem Land angefordert werden.

(F) Demandez le mode d'emploi et les instructions de montage dans votre langue au fabricant Truma ou au service Truma de votre pays.

(I) Potete richiedere le istruzioni d'uso e di montaggio nella Vostra lingua presso il produttore Truma o il servizio di assistenza Truma del Vostro Paese.

(NL) De gebruiks- en inbouwaanwijzing in Uw landstaal kan bij de fabrikant Truma of bij de Truma-service in Uw land worden aangevraagd.

(DK) De kan rekvirere brugs- og monteringsvejledningen på Deres sprog enten hos producenten Truma eller hos Truma-servicen i Deres land.

(E) Las instrucciones de uso y las instrucciones de montaje en el idioma de su país podrá solicitarlas del fabricante Truma o del Servicio Truma en su país.

Truma Gerätetechnik
GmbH & Co. KG
Postfach 1252
D-85637 Putzbrunn

Service (UK and Eire)
Telephone: (01283) 52 82 01
Facsimile: (01283) 52 82 02

Service (Deutschland)
Telefon +49 (0)89 4617-142
Telefax +49 (0)89 4617-159
e-mail: info@truma.com
www.truma.com

www.vwT4camper.info - a useful website for owners and enthusiasts of VW T4 Transporter Campervans

Ultrastore Rapid

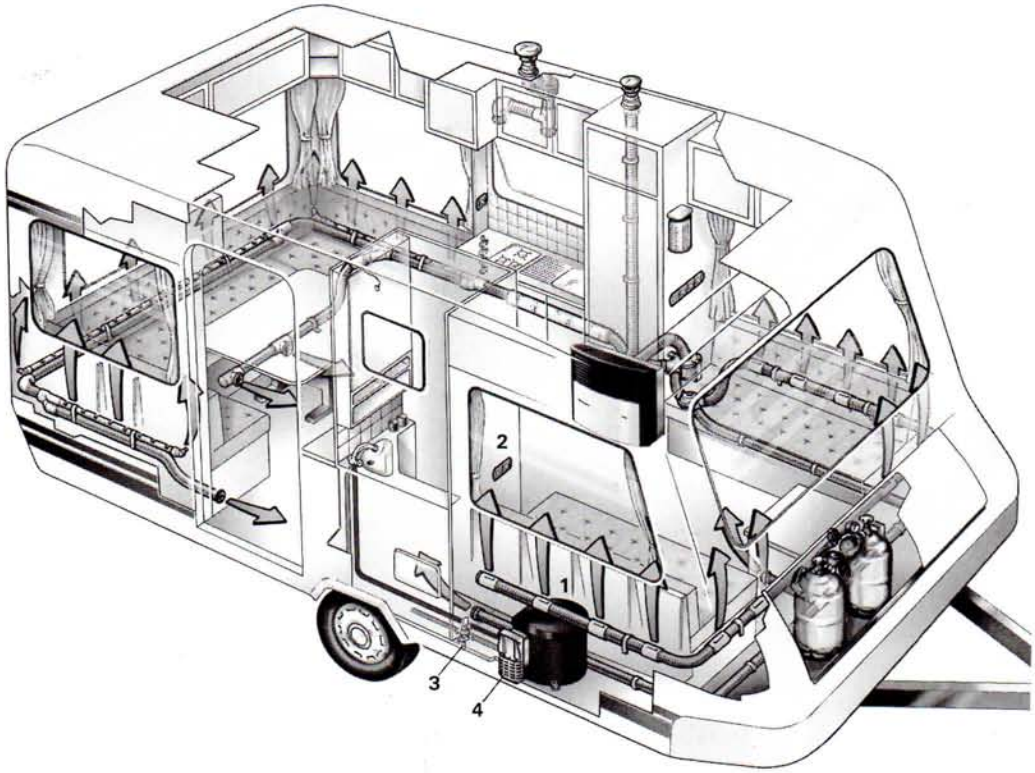

Installation example

1 Truma-Ultrastore
2 Control panels
3 Safety/drain valve
4 Cowl for combustion air intake and exhaust gas discharge

Important operating notes

If the cowl has been placed near or directly beneath an opening window, the device must be equipped with an automatic shut-off device in order to prevent operation with the window open.

2. Always mount the cowl cap if the water heater is not being used. Non-observance of this point can lead to the function of the appliance being impaired through water, dirt or insects.

There shall be no claim under guarantee if this point is not observed. Always remove the cowl cap prior to operating the water heater!

3. If just the cold water system is being used, without water heater, the heater tank is also filled up with water. In order to avoid damage through frost, the water contents must be drained by actuating the safety/drain valve, also when the heater has not been used. As an alternative, two shut-off valves, resistant to hot water, can be fitted in front of the cold and hot water connection.
Drain the water heater if there is a risk of frost!
There shall be no claim under guarantee if this point is not observed.

4. If connecting to a central water supply (rural or city connection) or when using more powerful pumps, a pressure reducer must be used which prevents pressures of greater than 2.8 bar occurring in the Ultrastore.

⚠ Before using the first time, it is essential to flush the entire water supply through with clean warm water. Always mount the cowl cap when the water heater is not being operated! Drain the water heater if there is a risk of frost!
There shall be no claims under guarantee for damage caused by frost!

The installer or vehicle owner must apply the yellow sticker with the warning information, which is enclosed with the appliance, to a place in the vehicle where it is clearly visible to all users (e.g. on the wardrobe door)! Ask Truma to send you stickers, if necessary.

Maintenance

The water container used is made of VA stainless steel, which is foodstuff-compatible.

Use wine vinegar for de-scaling the water heater, this being introduced into the appliance via the water supply. Allow the product to react and then thoroughly flush out the appliance with plenty of fresh water. To sterilise the water we recommend Certisil Combina or Micropur Forte.

To avoid infestation by micro-organisms, the boiler must be heated to 70°C at regular intervals.

Do not use the water as drinking water!

Fuses

The water heater 12 V fuse is on the electronic control unit on the water heater.

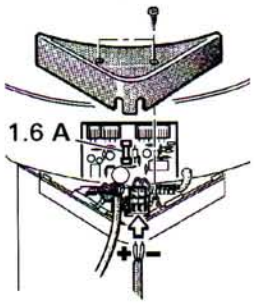

Only replace the miniature Fuse on the p.c.b. with a fuse of the same type: 1.6 A, EN 60127-2-3 (slow action).

If there is a defect in the electronics, return the control p.c.b. well padded. If you fail to pack it correctly the guarantee shall no longer be valid.

Only use original Truma-Ultrastore control p.c.b.'s as spare parts!

www.vwT4camper.info - a useful website for owners and enthusiasts of VW T4 Transporter Campervans

Operating instructions

Always observe the operating instructions prior to starting! The vehicle owner is responsible for the correct operation of the appliance.

Filling the Truma-Ultrastore with water

1. Check that the safety/drain valve in the cold water intake is closed: Lever should be in horizontal position, position (e).

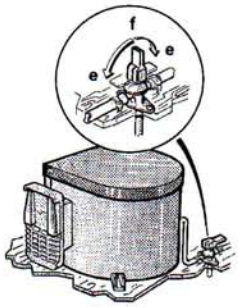

e = Lever position „Closed"
f = Lever position „Drain"

2. Open hot tap in bathroom or kitchen, with pre-selecting mixing taps or single-lever fittings set to „hot".

3. Switch on power for water pump (main switch or pump switch).

Leave the tap open to let air escape while the water heater is filling. The heater is filled when water flows out of the tap.

Residues of frozen water can prevent filling if there is a frost. The water heater can be defrosted by switching on the heater for a short period (max. 2 minutes). Frozen pipes can be defrosted by heating the room.

Draining the water heater

⚠ If the mobile home is not used during periods of frost, it is essential that the Truma-Ultrastore be emptied.

1. Disconnect power for water pump (main switch or pump switch).

2. Open hot water taps in bathroom and kitchen.

3. Open safety/drain valve: Lever in vertical position, position (f).

4. The water heater is now drained directly to the outside via the safety/drain valve. Check that the water contents have been completely drained (10 litres or 14 litres).

Switching on Gas operation

a = Rotary switch „On" „Gas operation"
b = Rotary switch „Off"
c = Rotary knob for temperature selection (illuminated by green lamp „Operation")
d = Red indicator lamp „Failure"

⚠ Never operate the water heater without water in it!

If the cowl is positioned vertically below an opening part of a window, the water heater must be fitted with an automatic shut-off device to prevent operation when the window is open.

1. Remove cowl cover.

2. Open gas cylinder and open quick-acting valve in the gas supply line.

3. Switch the boiler on at the rotary switch (a) of the control panel, and the green monitor lamp will light up. Set the desired water temperature at the rotary knob (c) (steplessly adjustable from about 30°C to 70°C).

When using the vehicle switches: refer to operating instructions of the vehicle manufacturer or see switch labels.

4. If there is air in the gas supply line, it may take up to a minute before the gas is available for combustion. If the appliance switches to „Failure" during this period, switch off the appliance - wait 5 minutes - and switch on again!

Switching off

Switch the boiler off at the rotary switch (b). Mount cowl cap. Drain the water heater if there is a risk of frost. Close quick-acting valve in the gas supply line if the appliance is not to be used for a longer period of time and close the gas cylinder.

Red indicator lamp „Failure"

The red indictor lamp (d) lights up if there is a failure.
For possible causes please refer to page 5. To unlock, switch off the appliance, wait 5 minutes, and switch on again.

Switching on Electric Operation (230 V, 850 W, 3.7 A)

g = Rocker switch, „Off"
h = Rocker switch, „On" „Electrical operation"

Never operate the water heater without water in it!

Switch on at the control panel (h). The indicator lamp indicates that the electrical water heating is switched on.

When using the vehicle switches: refer to operating instructions of the vehicle manufacturer or see switch labels.

⚠ The water temperature cannot be selected, automatic temperature limitation at approx. 70°C! For a faster heating up period the appliance can be simultaneously operated with gas **and** electrical power.

ⓘ The electrical heating rod is fitted with an excess temperature cut-out. In the event of a fault, switch off at the operating element, wait 5 minutes, then switch on again.

General safety notes

In event of leaks in the gas system or if there is a smell of gas:

- extinguish all naked flames!
- do not smoke!
- switch off all appliances!
- shut off the gas cylinder!
- open the windows and doors!
- do not actuate any electrical switches!
- have the entire system checked by an expert!

⚠ Repairs may only be carried out by an expert.

1. Any alteration to the appliance (including cowl) or the use of spare parts and accessories which are important for the functioning of the heater and which are not original Truma parts, as well as the non-observance of the installation and operating instructions, shall lead to the cancelling of the guarantee and exclusion of liability claims. It also becomes illegal to use the appliance, and in some countries this even makes it illegal to use the vehicle.

www.vwT4camper.info - a useful website for owners and enthusiasts of VW T4 Transporter Campervans

2. The operating pressure for the gas supply is 30 mbar (or 28 mbar butane/37 mbar propane) and must correspond to the operating pressure of the appliance (see data plate).

3. Liquid gas systems must accord with the technical and administrative regulations of the particular country in which they are being used (e.g. EN 1949 for vehicles). National regulations must be respected.

The testing of the gas system must be repeated **every two years** by a qualified specialist and, if appropriate, confirmed on the inspection certificate.

The vehicle owner is always responsible for arranging the inspection.

4. L.P.G. appliances may not be used when refuelling the vehicle, when in closed car parks, in the garage or on ferry boats.

5. During the initial operation of a brand new appliance (or after it has not been used for some time), a slight amount of fumes and a slight smell may be noticed for a short while. Remedial action here is to immediately run the heater and to ensure adequate room ventilation.

6. If the burner makes an unusual noise or if the flame lifts off, it is likely that the gas pressure regulator is faulty and it is essential to have it checked.

7. Items sensitive to heat (e.g. spray cans) must not be stored in the installation area, since excess temperatures may under circumstances be incurred there.

8. Only pressure control equipment that complies with EN 12864 (in vehicles) with a fixed delivery pressure of 30 mbar must be used for the gas system. The flow rate of the pressure control device must correspond to at least the maximum consumption of all devices installed by the system manufacturer.

For vehicles we recommend the Truma caravan regulator and the Duomatic Plus gas pressure regulator kit for the two-bottle system. Truma regulators have been specially developed for the harsh stress conditions in caravans and vehicles. As well as a safety valve that provides protection against overpressure, they also have a pressure gauge that can be used to check the tightness of the gas system. The pressure control equipment should be operated with a de-icing system (Eis-Ex) at temperatures around 0°C and below.

Regulator connecting hoses that meet national regulations must always be used in the respective country for which the equipment is destined. These hoses must be checked regularly for brittleness. Winter-proof special hoses must always be used if the equipment is operated during the winter.

Technical data

determined in accordance with EN 624 or Truma test conditions

Manufacturer:
Truma Gerätetechnik GmbH & Co. KG
P.O. Box 1252
85637 Putzbrunn/Munich
Germany
Water contents: 10 litres or 14 litres
Water pressure: up to max. 2.8 bar
Type of gas: Liquid gas (propane/butane)
Operating pressure: 30 mbar
(or 28 mbar butane/ 37 mbar propane)
Rated thermal output: 1500 W
Gas consumption: 120 g/h
Heating up time to approx. 70°C
(10 litres)
Gas operation: approx. 35 min.
Electrical operation: approx. 45 min.
Gas and electrical operation: approx. 25 min.
Heating up time to approx. 70°C
(14 litres)
Gas operation: approx. 50 min.
Electrical operation: approx. 72 min.
Gas and electrical operation: approx. 38 min.
Power consumption 12 V
Ignition: 0.17 A
Heating up: 0.08 A
Standby: 0.04 A
Power consumption 230 V
Heating up: (3.7 A) 850 W
Weight (empty): approx.: 6.7 kg

Declaration of conformity:
The Truma-Ultrastore model has been tested and approved through the DVGW and fulfils the EC gas appliance guidelines (90/396/EEC) as well as the associated EC guidelines.
The CE product number is available for EU countries:
CE-0085AP0038

EEC Type Approval:
e1 022604

CE G 607

The right to effect technical modifications is reserved!

Dimensions:

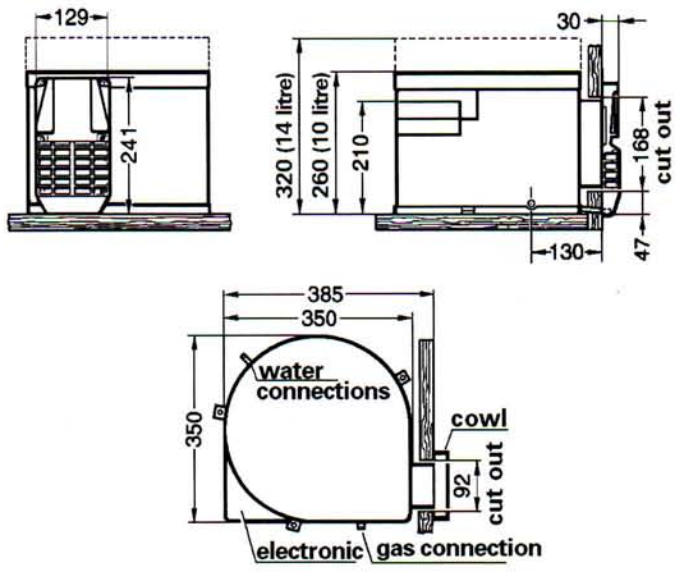

www.vwT4camper.info - a useful website for owners and enthusiasts of VW T4 Transporter Campervans

Fault finding

Gas operation

Symptom	Cause
When switching on, the heater does not operate	- No 12 V supply voltage - Window open

Check the power supply (operation voltage min. 10.5 V).
Check the water heater fuse (refer to mainanance „Fuses").
Close any windows above the cowl.

When switching on, the heater does not operate and the red lamp lights up after approx. 30 secs.	- Cowl cover fitted - Air in the gas supply - No gas supply - Incorrect gas pressure

Remove cowl cover and/or clear any obstruction.
Check gas valves and gas bottle.
To unlock (and purge air), switch off the appliance, wait 5 minutes, and switch on again.

Heater operates for a prolonged time and then the red lamp lights up	- Over temperature thermostat operated

Check water content, refill if required (close drain valve).
To unlock, switch off the appliance, wait 5 minutes, and switch on again.

Electrical operation

Symptom	Cause
When switching on, the heater does not operate	- No 230 V supply voltage - Over temperature thermostat operated

Connect the caravan to the site supply and/or check residual current circuit breaker.
Check water content, refill if required (close drain valve).

The electrical heating element is fitted with an excess temperature cut-out. In event of a fault, switch off at the control panel, wait 5 minutes, then switch on again.

Water supply

Symptom	Cause
Water drips from the safety/drain valve	- Water pressure to high

Check water pressure (max. 2.8 bar), use a pressure reducer when connected to central water supply.

When opening the cold water tap, hot water tap comes out	- Hot water flows back through the cold water supply

Fit a no-return valve in the cold water supply (refer to installation instructions „Water connection").

If fault persists please contact the nearest Truma-Service (refer to page 10).

Manufacturer's terms of warranty

1. Case of warranty

The manufacturer grants a warranty for malfunctions in the appliance which are based on material or production faults. In addition to this, the statutory warranty claims against the seller remain valid.

A claim under warranty shall not pertain:

- for parts subject to wear and in cases of natural wear and tear,
- as a result of not original Truma parts being used in the appliance and as a result of unsuitable gas pressure regulators being used,
- as a consequence of failure to respect Truma instructions for installation and use,
- as a consequence of improper handling,
- as a consequence of improper transport packing, not arranged by Truma.

2. Scope of warranty

The warranty is valid for malfunctions as stated under item 1, which occur within 24 months after conclusion of the purchase agreement between the seller and the final consumer. The manufacturers will make good such defects by subsequent fulfilment, i.e. at their discretion either by repair or replacement. In the event of manufacturers providing service under warranty, the term of the warranty shall not recommence anew with regard to the repaired or replaced parts; rather, the old warranty period shall continue to run. More extensive claims, in particular claims for compensatory damages by purchasers or third parties, shall be excluded. This does not affect the rules of the product liability law.

The manufacturer shall bear the cost of employing the Truma customer service for the removal of a malfunction under warranty - in particular transportation costs, travelling expenses, job and material costs, as long as the service is carried out in Germany. Customer service carried out abroad is not covered by the warranty.

Additional costs based on complicated removal and installation conditions of the appliance (e.g. removal of furniture or parts of the vehicle body) do not come under warranty.

3. Raising the case of warranty

The manufacturer's address is:
Truma Gerätetechnik GmbH & Co. KG,
Wernher-von-Braun Strasse 12, D-85640 Putzbrunn.
In Germany, in the event of faults the Truma Service Centre should in principle be contacted; abroad, the individual service partners are available (see address list). Any complaints are to be described in detail. In addition, the properly completed guarantee certificate is to be presented, or the factory number of the unit and the date of purchase given.

In order for the manufacturers to be able to determine whether an incident subject to guarantee has occurred, the end user must, at his own risk, bring the device to the manufacturers or send it to them. If there is damage to heaters (heat exchangers), the gas pressure regulator must also be sent back to the factory.

In instances of the device being sent to the works, dispatch is to be effected by freight transport. In cases under guarantee, the works shall bear the transport costs or the costs of delivery and return. If the damage is deemed not to be a warranty case, the manufacturer shall notify the customer and shall specify repair costs which shall not be borne by the manufacturer; in this case, the customer shall also bear the shipping costs.

www.vwT4camper.info - a useful website for owners and enthusiasts of VW T4 Transporter Campervans

Installation instructions

Installation and repair are only to be carried out by an expert. Always read and follow the operating instructions carefully prior to starting any work!

Intended use

This appliance has been designed for the installation in caravans, mobile homes and other vehicles. It is not approved for installation in boats. Other forms of use are also possible following consultation with Truma.

Information regarding boats: For installation in boats Truma supplies the DVGW-tested boat water heater.

Regulations

Any alteration to the appliance (including cowl) or the use of spare parts and accessories which are important for the functioning of the heater and which are not original Truma parts, as well as the non-observance of the installation and operating instructions, shall lead to the cancelling of the guarantee and exclusion of liability claims. It also becomes illegal to use the appliance, and in some countries this even makes it illegal to use the vehicle.

In-vehicle installations must comply with the technical and administrative regulations of the respective country of use (e.g. EN 1949 for vehicles). The national regulations and rules must be complied with.

Water heater kit

The water heater kit contains:
1 Assembled water heater
1 Cowl assembly with screws
1 Hot water connector
1 Cold water connector
1 Safety (pressure relief) drain valve
1 Wall switch (gas operation) with 3 m cable
1 Wall switch (230 V operation with 3 m cable) - **option** -
1 Installation template
1 Set literature
1 Label with warning information

In order to guarantee complete emptying of the water content, ongoing sealing tightness of the water connections and safety function **all enclosed parts must be used!**

Choice of location

1. Always install the appliance in such a way that it is easily accessible for service work at all times and can be easily removed and installed.

2. Locate the heater in such a way that the cowl can be mounted on the outside on a surface which is as straight and smooth as possible. This outside surface must be exposed to wind from all directions and, if possible, there should be no trim strips or covers in this area, mount heater on an appropriate base, if necessary.

The cowl may not be positioned within 500 mm (A) of a refuelling point or fuel tank breather outlet or within 300 mm (A) of a ventilator for the living space. If the cowl is positioned vertically below an opening part of a window, the water heater must be fitted with an automatic shut-off device (please refer to page 11) to prevent operation when the window is open.

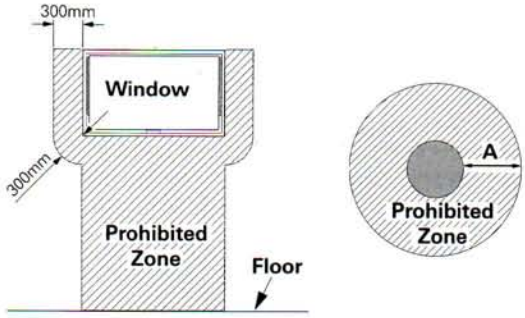

Installation of the water heater

1. Position template for cowl opening on the inside of the wall.

A = bottom edge of heater
B = lateral edge of heater

Drill 4 holes (C) with 10 mm dia. through the wall. Drill hole (E) with 15 mm dia. for condensation pipe (also possible from the outside = F).

2. Position template on the outside of the wall. The markings (C) must be above the through-holes. Saw cut-out section for cowl (D) 92 x 168 mm.

If the distance between outside wall and heater is more than 35 mm you must use the cowl extension VBO 2 (please refer to page 11) with an additional length of 50 mm. Saw out 100 x 176 mm along the dashed line.

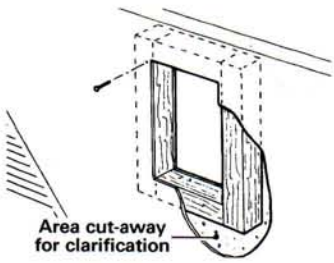

If there are any cavities in the area of the cowl, pack these with pieces of wood so as to be able to tighten the screws. The finished hole should be 168 mm high and 92 mm wide.

Cut cut trim strips or such on the vehicle or place supports beneath them so as to make the cowl lie flat.

Place a support beneath the heater if the walls are sloping. An angle of inclination of 10 degrees is not to be exceeded.

3. Insert heater with cowl body (1) through the wall cut-out (2), allow approx. 5 mm to project out of the wall. Mount sealing frame (3) (the anti-twisting device ensures correct fitting!). Predrill holes for the 6 fastening bolts (4).

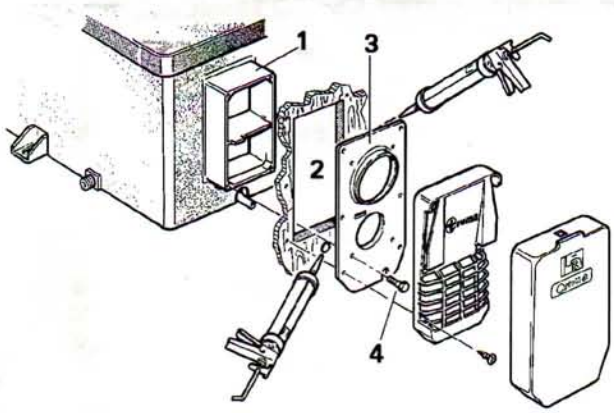

4. Remove sealing frame (3) and coat with non hardening mastic on the side facing the vehicle - do not use silicone!

⚠ The sealing frame must be well sealed with respect to the front sides and the cross bars of the cowl body (1) as well as towards the outside wall!

5. Fasten sealing frame (3) to the cowl body using 4 self-cutting screws (4).

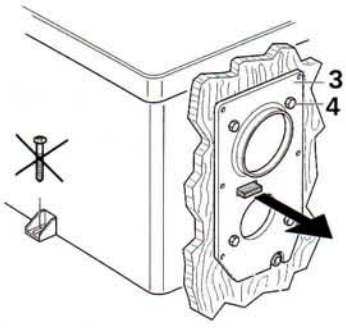

⚠ **Screw the sealing frame (3) in contact together with the cowl body (1) so the anti-twist device projects out!**

www.vwT4camper.info - a useful website for owners and enthusiasts of VW T4 Transporter Campervans

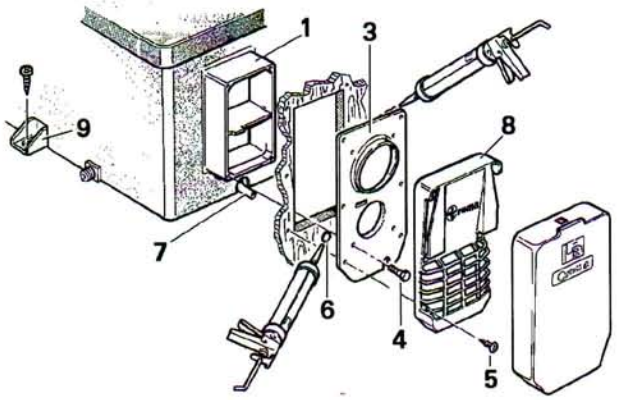

6. Seal the gap between the hole (6) and the condensation tube (7) with non hardening mastic - do not use silicone!

7. Mount the grille (8). Press the entire cowl assembly onto the vehicle wall and fasten with 6 screws (5).

8. Screw the water heater securely to the floor of the vehicle with at least two shackle plates (9) with the screws provided, B 5.5 x 25, on suitable base (plywood panel, laminated wood strips or metal base).

Water connection

All pressure and submergible waterpumps up to 2.8 bar and all mixed combination sets with or without an electrical switch, can be used for operating the water heater.

If connecting to a **central water supply** (rural or city connection) or when using more powerful pumps, a **pressure reducer** must be used which prevents pressures of greater than **2.8 bar** occurring in the boiler.

When using submergible pumps, a non-return valve (10 - not included in the scope of supply) must be fitted between the pump and the first branch point (arrow points in direction of flow).

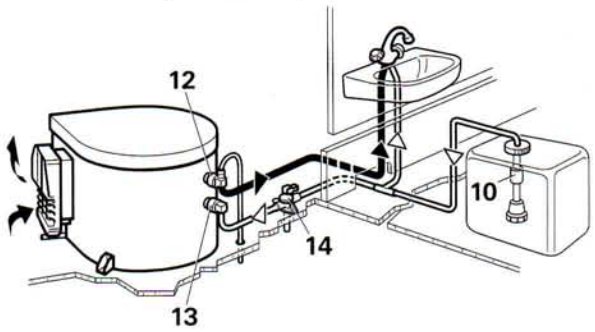

When using pressure pumps with high switching hysteresis, hot water may flow back through the cold water tap. To prevent the backflow, we recommend that a non-return valve (11 - not included in the scope of supply) be fitted between the outlet to the cold water tap and the drain valve.

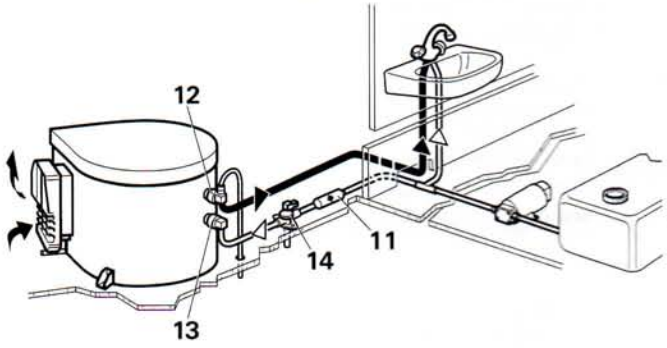

⚠ In order to guarantee complete emptying of the water content and ongoing sealing tightness of the water connections, the enclosed **water connectors** (12 + 13) **and** the **safety (pressure relief) drain valve** (14) **must be used!**

John Guest System rigid pipe routing

The water connectors (12 + 13) and safety/drain valve (14) supplied with the Truma Boiler have a straight 12 mm diameter fitting.

For connecting to rigid pipes with other diameters appropiate adapters (not included in scope of delivery) must be used.

Flexible water hose routing

As special accessories Truma supplies the water connectors (12 + 13) and safety/drain (14) valve with a 10 mm diameter hose nipple (please refer to page 11).

Pressure-resistant (up to 3.5 bar) and hot water-resistant water hoses in food quality with an internal diameter of 10 mm must be used.

⚠ Route water hoses so that they are as short and free of kinks as possible. All hose connections must be secured using hose clamps (also for cold water)! Pressures of up to 3.5 bar can occur in the safety/drain valve (also with submergible pumps) because of the heat of the water and the resulting expansion.

All hot water hoses should be routed in a descending manner to the safety/drain valve! Otherwise no guarantee of protection from frost!

Installation of the safety (pressure relief) drain valve

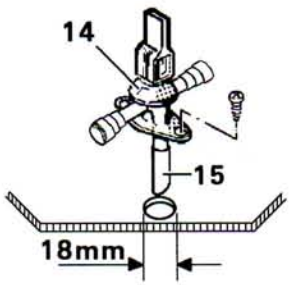

Install the safety/drain valve (14) at a place which is easily accessible, near the water heater. Drill hole with 18 mm diameter and pass through discharge socket with hose (15). Fasten safety/drain valve with 2 screws. The draining is to be directly to the outside at a position protected against splash water (apply splash guard, if necessary).

Water pipe routing

1. Connect cold water supply (16) to safety/drain valve (14). Direction of flow is unimportant.

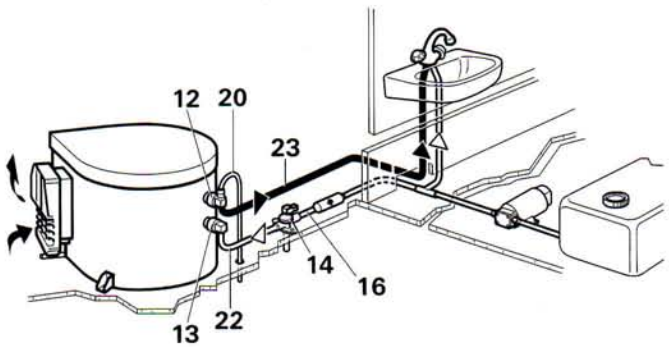

www.vwT4camper.info - a useful website for owners and enthusiasts of VW T4 Transporter Campervans

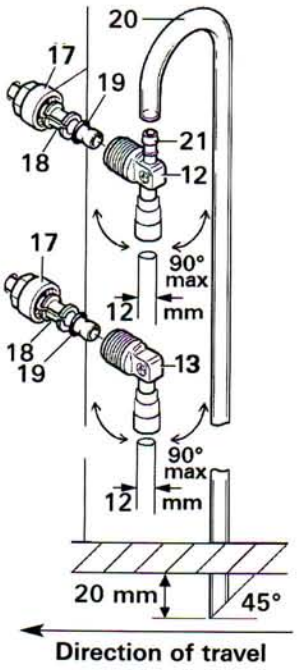

2. Screw elbow with integrated breather valve (12) to hot water connection pipe (upper pipe) and elbow without breather valve (13) to cold water connecting pipe (lower pipe).

Slide on nut (17), tension ring (18) and O-ring (19). Assemble screw connector and connecting pipe and fasten together using nut (17).

Slide ventilation hose with 11 mm outer diameter (20) onto the breather valve hose nozzle (21) and route towards the outside. Do not allow the radius of the arc to be less than 40 mm.

Cut off the ventilation hose approx. 20 mm below the floor of the vehicle at an angle of 45° to the direction of travel.

3. Produce connection (22) for cold water supply between safety/drain valve (14) and elbow (13 - lower pipe) on water heater.

4. Route the hot water pipe (23) from the elbow with integrated breather valve (12 - upper pipe) to the hot water consumers.

Gas connection

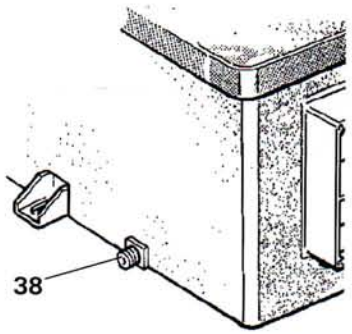

⚠ The operating pressure for the gas supply is 30 mbar (or 28 mbar butane/37 mbar propane) and must correspond to the operating pressure of the appliance (see name plate).

The 8 mm gas supply line is connected to the connection nozzle (38) with cutting ring connection. The cutting rings are to be selected according to the gas pipe used (for copper pipe: support sleeves and brass cutting ring as supplied). Carefully hold in place with a second wrench when tightening!

Before connecting to the water heater make sure that the gas lines are free from dirt, chips and such!

Route the pipes in such a way that the appliance can be removed again for servicing.

In areas frequented by people, keep the number of parting connections in the gas supply line to an technically feasible minimum.

The entire system must accord with the technical and administrative provisions of the individual country of use (e.g. EN 1949 for vehicles). National specifications and regulations must be respected.

Installation of the control panels

⚠ When using control panels which are specific to the vehicle or the manufacturer, the electrical connection must be established in accordance with the Truma interface descriptions (refer to Electrical connection 230 V). Any modification made to the Truma components pertaining to this will lead to the invalidation of the guarantee, as well as to the exclusion of any claims for liability. The installer (manufacturer) is responsible for providing instructions for use for the user as well as for identification printing on the control panels.

When selecting the location, bear in mind that the control panels must not be subjected to direct radiant heat. Length of connection cable 3 m. If required, a cable extension of 5 m can be supplied (please refer to page 11).

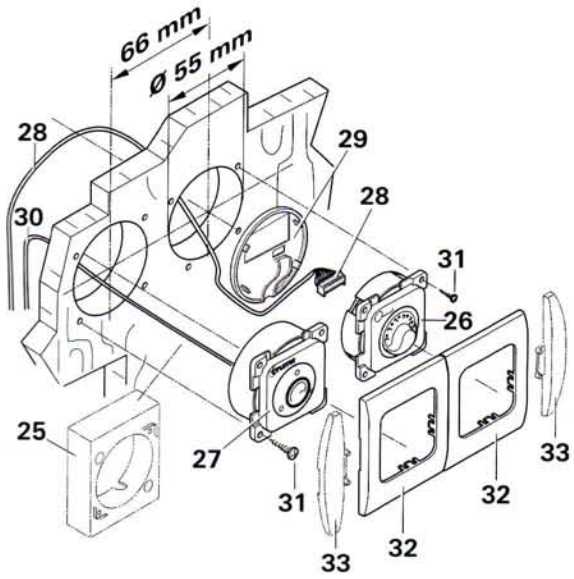

ⓘ If it is not possible to install the control panels flush with the surface, Truma can provide a surface-mounting frame (25) on request, as a special accessory (Art. no. 40000-52600).

1. The control panel for gas operation (26) and (if provided) the control panel for electrical operation (27) should be fitted next to one another if at all possible (distance between centres of holes 66 mm).

2. In each case, drill a hole with diameter 55 mm (distance between centres of holes 66 mm).

3. Plug the control panel cable (28) to the control panel for gas operation (26) and then fit on the rear cover cap (29) as a stress-relieving device.

4. Push the cable through to the rear and lay the connection cable (28 + 30) to the boiler.

5. Lay the connection cable with the orange multipole connector (28) to the 12 V control electronics unit (for connection see Point 6, electrical connection 12 V).

6. Secure both control panels with 4 screws (31) each and fit the cover frame (32) on them.

ⓘ To round off the appearance of the cover frame, Truma can provide side pieces (33) as special accessories in 8 different colours (please ask your dealer).

www.vwT4camper.info - a useful website for owners and enthusiasts of VW T4 Transporter Campervans

Electrical connection 12 V

Always disconnect the appliance from the power supply prior to working on electrical components. It is not sufficient to just switch off at the control panel!

The appliance must be disconnected from the vehicle main power supply when carrying out any electric welding work on the vehicle body.

⚠ If the connections are transposed there is a risk of cable burning. This also rules out any guarantee or liability claims.

Unscrew cover (34) from the electronic control unit. Slide cable connector of control panel (28) onto the p.c.b.. The electrical connection 12 V is made at terminal (35).

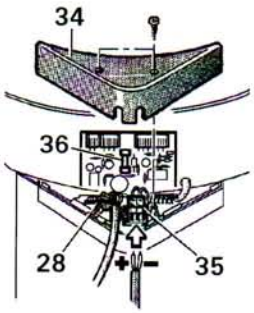

orange = positive 12 V
blue = negative

To connect press with a small screwdriver from above and push in cable from the front.

Connect to fused vehicle mains (central electrical equipment 5 - 10 A) using a 2 x 1.5 mm² cable.

Negative cable to central earth. With lengths of over 6 m use a cable 2 x 2.5 mm². If connecting directly to the battery, the positive and negative cable must be fused. Screw cover (34) back on.

There are to be no other 12 V consuming appliances connected to the supply line!

The water heater fuse (36), 1.6 A, (slow-acting) **is on the p.c.b..**

When using power packs, observe that the appliance is only to be operated with safety extra-low voltage according to EN 60742!

ⓘ For the connection of several 12 V appliances we recommend the electronically controlled Truma power pack NT (Art. no. 39900-01). The Truma power pack (6 A continuous current) is also suitable for charging lead batteries. Other charging devices are only to be used with a car battery acting as buffer. Power packs and power supply units must have a stabilised 12 V-output (ripple content less than 1 V).

Electrical connection 230 V

⚠ **The electrical connection is only to be carried out by a licensed electrician.** The information given here is not intended as information for the layman, rather it is to for assisting the assigned electrician, as additional information, when connecting the appliance!

The connection to the power supply is by means of a cable 3 x 1.5 mm² (e.g. flexible sheathed cable H05VV-F) to a splitting box (not included in scope of delivery).

Always pay attention to connect carefully with the correct colours!

For maintenance and repair work a disconnecting device must be provided on the vehicle for all-pole disconnection from the power supply, with at least 3 mm contact clearance.

Connection 230 V with Truma control panel

1. Connect control panel cable, supply line 230 V and heating element cable as shown in the drawing.

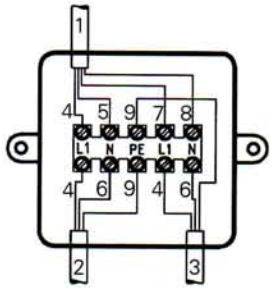

1 = Control panel cable
2 = Supply line 3 x 1.5 mm²
3 = Heating element cable
4 = brown
5 = green
6 = blue
7 = yellow
8 = white
9 = yellow/green

2. Assemble the splitting box on the vehicle floor or on the wall, in the vicinity of the appliance (observe cable length 150 cm!).

ⓘ All cables must be secured with cable clips.

Conection 230 V with specific vehicle or manufacturer control panels

Connect control panel cable, 230 V cable and heating element cable as shown in the drawing.

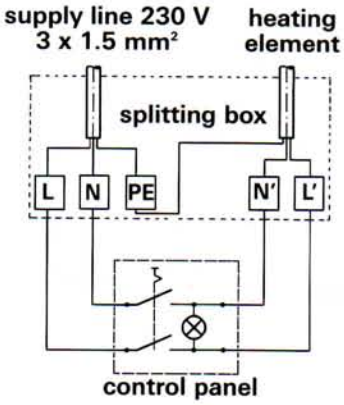

Cables must be in accordance with the technical rules and regulations of the country in which the vehicle is to be registered, for the first time.

Function check

After installation, the gas feed line must be tested for tightness by the pressure-drop method. A test certificate is to be issued.

Then check all functions of the appliance, as specified in the operating instructions, in particular the water content draining function.
There shall be no claims under guarantee for damage caused by frost!

Never operate the water heater without water contents. It is, however, possible to briefly check the electrical function without water contents. Always observe the operating instructions prior to operation!

The operating instructions and completed guarantee card are to be given to the owner of the vehicle.

Warning information

The installer or vehicle owner must apply the yellow sticker with the warning information, which is enclosed with the appliance, to a place in the vehicle where it is clearly visible to all users (e.g. on the wardrobe door)! Ask Truma to send you stickers, if necessary.

www.vwT4camper.info - a useful website for owners and enthusiasts of VW T4 Transporter Campervans

International-Service

(A) Globus Mobil Park, 8942 Wörschach 300,
Tel. 0043 (0)3682 241 60, Fax 0043 (0)3682 241 06

Wohnmobil-Handels-Center-Innsbruck-GmbH,
Josef-Wilberger-Str. 45, 6020 Innsbruck,
Tel. 0043 (0)512 20 50 11, Fax 0043 (0)512 205 01 14

Wohnwagen Pusch, Linzer Straße 138, 4810 Gmunden,
Tel 0043 (0)7612 67 94 50, 0043 (0)7612 676 00

(AUS) Dometic Pty Ltd, 6 Treforest Drive, Clayton, Vic. 3168,
Tel. 0061 (0)3 95 45 56 55, Fax 0061 (0)3 95 45 59 66

(B) Gautzsch Gimeg N.V., Drie Sleutelsstraat 74, 9300 Aalst,
Tel. 0032 (0)53 70 66 77, Fax 0032 (0)53 21 61 62

(BY) Tachograph Ltd., P. Brovki Str. 15, 220072 Minsk,
Tel. 00375 (0)17 22 66 82 02, Fax 00375 (0)172 89 25 52

(CH) Selzam AG, Harzachstrasse 8, 8404 Winterthur,
Tel. 0041 (0)52 233 25 21, Fax 0041 (0)52 232 97 15

(CZ) KOV, Karosárna a slévárna, Sokoloská 615, 28101 Velim,
Tel. 00420 (0)321 76 35 58, Fax 00420 (0)321 76 33 37

(D) Truma Gerätetechnik GmbH & Co, Wernher-von-Braun-Straße 12,
85640 Putzbrunn bei München,
Tel. 0049 (0)4617-141, Fax 0049 (0)4617-116

(DK) Olympic A/S, Tvaervej 2, 6640 Lunderskov
Tel. 0045 75 58 57 00, Fax 0045 75 58 63 07

(E) Stimme, S.L., Poligono Industr. Mediterraneo,
Calle Ildefonso Carrascosa 2, 46560 Massalfassar (Valencia),
Tel. 0034 961 40 00 58, Fax 0034 961 40 24 62

(EST) Parkli HL, Mustjõe 39, 10617 Tallinn,
Tel. 00372 655 00 00, Fax 00372 656 26 30

(F) Euro Accessoires, ZAE Parc de Champagne – B.P. 89,
07303 Tournon-sur-Rhône Cédex,
Tel. 0033 (0)4 75 06 92 92, Fax 0033 (0)4 75 06 92 96

(FIN) Kehä Caravan Tukku Oy, Koskelontie 15, 02920 Espoo,
Tel. 00358 (0)9 84 94 30 34, Fax 00358 (0)9 84 94 30 30

(GB) Truma (UK) Limited, Truma House, Eastern Avenue,
Burton Upon Trent, Staffordshire, DE13 0BB,
Tel. 0044 (0)1283 52 82 01, Fax 0044 (0)1283 52 82 02

(GR) G. Bournas - G. Efthimiou O.E., P. Ralli 36 & Ag. Annis,
12241 Egaleo - Athen,
Tel. 0030 (0)210 346 14 14, Fax 0030 (0)210 342 34 03

(H) Virág Trans Bt., újhegyi út 7, 1108 Budapest,
Tel. 0036 (0)1 433 57 61, Fax 0036 (0)1 261 32 49

(HR) Klimamobil, Štefanovečki zavoj 17a, 10040 Zagreb,
Tel. 00385 (0)1 291 01 43, Fax 00385 (0)1 295 05 21

(I) Dimatec S.p.A., Via Galileo Galilei, 7, 22070 Guanzate (CO),
Tel. 0039 031 352 90 61, Fax 0039 031 352 96 89

(IS) Afl-Húsbílar ehf., Gránufélagsgata 49, 600 Akureyri,
Tel. 00354 462 79 50, Fax 00354 461 26 80

Bilaraf Ltd., Audbrekka 20, 200 Kópavogur,
Tel. 00354 564 04 00, Fax 00354 564 04 04

(J) Carac Industry Co., Ltd., 1-4-2 Heiwadai, Nerimaku,
Tokyo 179-0083,
Tel. 0081 (0)3 3931 02 20, Fax 0081 (0)3 3931 07 06

(L) Ets Geiben s.à.r.l., 260, route d'Esch, 4451 Belvaux,
Tel. 00352 59 15 19, Fax 00352 59 44 55

(LT) Autokurtas, Lazdiju Str. 20, 3018 Kaunas,
Tel. 00370 37 39 10 90, Fax 00370 37 39 14 54

(N) Neptus A.S., Høymyrmarka 7, 1391 Vollen,
Tel. 0047 66 75 99 50, Fax 0047 66 75 99 51

(NL) Gautzsch Gimeg B.V., Strijkviertel 25, 3454 PH De Meern,
Tel. 0031 (0)30 662 95 22, Fax 0031 (0)30 666 53 97

(NZ) Leisure Appliances New Zealand Ltd, 58 Kemp Street, Kilbirnie,
Wellington, Tel. 0064 (0)4 387 42 00, Fax 0064 (0)4 387 42 02

(P) J.C.L. Andrade, Lda., Apartado 718, Lugar do Padrao, E.N. 327 -
S. Miguel do Souto, Sta. Maria da Feira, 4524-906 Souto V.F.R.,
Tel. 00351 256 80 10 34, Fax 00351 256 80 14 88

Marcampo - Artigos de Campismo, Lda.,
Av. Almirante Gago Coutinho, 56D, 1700-031 Lissabon,
Tel. 00351 21 848 67 76, Fax 00351 21 847 06 99

(PL) Truma Polska Sp. z o.o., ul. Kuczkowskiego 3/2U, 31-619 Krakau,
Tel. 0048 (0)12 641 02 41, Fax 0048 (0)12 641 91 33

(RUS) Comapnija Poliauto, Hawskaja str. 3, ab 3., 113162 Moskau,
Tel. 007 (0)95 232 00 29, Fax 007 095 958 27 57

(S) Alde International Systems AB, Wrangels Allé 90, 29111 Färlöv,
Kristianstad, Tel. 0046 (0)44 712 74, Fax 0046 (0)44 718 48

(SLO) Prebil d.o.o., Opekarska 14, 1000 Ljubljana,
Tel. 0038 (0)61 542 63 70, Fax 0038 (0)61 542 63 71

(SK) Tamex spol. s r.o., Kovácsova č. 359, 85110 Bratislava,
Tel. 00421 (0)2 44 45 49 20, Fax 00421 (0)2 44 45 49 35

(TR) Karyat Karavan Yat San. Tic. Ltd. Sti.,
Kusdili Cad. Efes Ishani Kat: 3, No: 171 Kadiköy, 81310 Istanbul,
Tel. 0090 (0)216 418 73 96, Fax 0090 (0)216 418 73 97

19. 05. 2003

www.vwT4camper.info - a useful website for owners and enthusiasts of VW T4 Transporter Campervans

Accessories

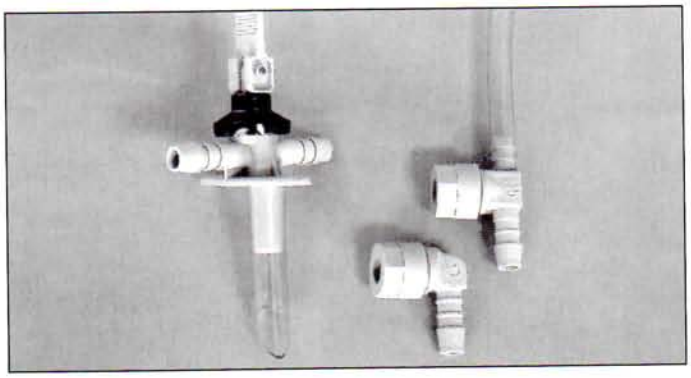

Safety/drain valve and water connectors for flexible water hoses

34150-01	Hot water connector, 10 mm
70150-01	Cold water connector, 10 mm
70141-12	Safety drain valve (2.8 bar), 10 mm

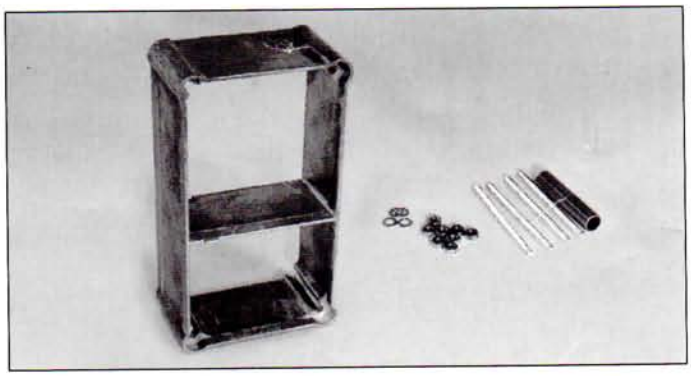

Cowl extension for wall thicknesses over 35 mm

70131-00	Cowl Extension VBO 2

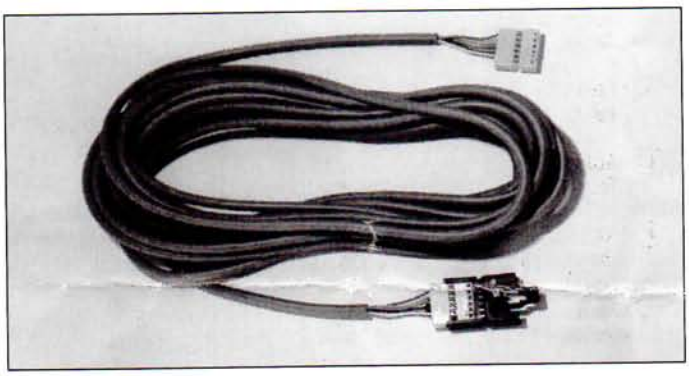

Control panel extension cable

70000-53500	Control Extension 5 m

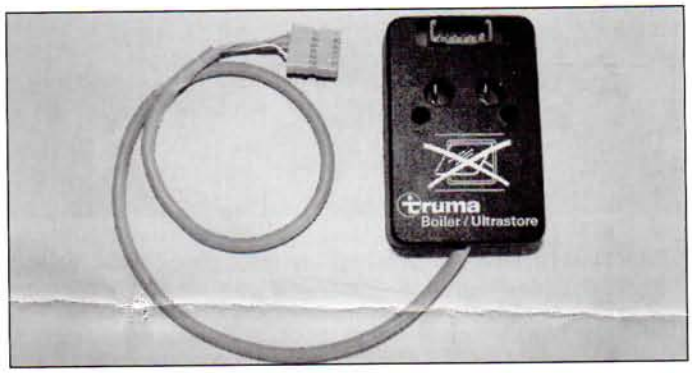

Shut off device
to use when the cowl is fitted under a opening part of a window (the appropriate window switch is not in the scope of delivery)

70020-00800	Shut-off device

truma

Guarantee Card
Garantie-Karte
Bon de Garantie
Certificato di Garanzia
Garantiebon
Garantikort
Tarjeta de garantía

www.vwT4camper.info - a useful website for owners and enthusiasts of VW T4 Transporter Campervans

Quality with tradition

Truma was founded in 1949 and has since become the leading European manufacturer of vehicle and boat liquid gas heaters.

The entire programme of Truma products is designed to run on clean liquid gas fuel.

Using the knowledge gained from practical experience, over the years Truma has developed warm air systems, storage water heaters, air conditionings, lamps, pressure regulators and accessories for Caravans and mobile homes and therefore decisively influenced the development of the camping scene as a whole.

Today Truma is the internationally acknowledged brand leader, operating on the basis of the certified quality management system according to ISO 9001.

To be filled in by the dealer.

truma

Ultrastore Rapid

Guarantee Card
Garantie-Karte
Bon de Garantie
Certificato di Garanzia
Garantiebon
Garantikort
Tarjeta de garantía

Date of sale
Verkaufsdatum
Date de vente
Data di vendita
Verkoopdatum
Salgsdato
Fecha de venta

Dealer's address
Händler-Adresse
Adresse du commerçant
Timbro del rivenditore
Dealeradres
Forhandleradresse
Dirección del comerciante

Serial number
Fabrik-Nummer
No. de fabrication
No. di matricola
Serie-nummer
Seriennummer
Número de fábrica

05/2003 · Truma, Postfach 1252, D-85637 Putzbrunn

70010-28800 · 05/2003 · 20'B+W · ©

www.vwT4camper.info - a useful website for owners and enthusiasts of VW T4 Transporter Campervans