VOLKSWAGEN

SHERBOURNE

February 2001

WELCOME

CONGRATULATIONS ON YOUR PURCHASE OF AN AUTO-SLEEPER, WE ARE CONFIDENT IT WILL GIVE YOU MANY YEARS OF PLEASURE.

THIS HANDBOOK HAS BEEN COMPILED TO ENABLE YOU TO OBTAIN THE MAXIMUM PLEASURE FROM YOUR VEHICLE. IT CONTAINS INSTRUCTIONS FOR THE USE OF THE APPLIANCES INSTALLED IN IT ALONG WITH ADVICE ON SAFETY MATTERS. YOU SHOULD BE FAMILIAR WITH THESE BEFORE USING YOUR AUTO-SLEEPER.

IF YOU EXPERIENCE ANY DIFFICULTIES YOU SHOULD, IN THE FIRST INSTANCE, CONTACT YOUR SUPPLYING DEALER WHO WILL BE PLEASED TO ADVISE.

YOUR AUTO-SLEEPER CONFORMS TO THE CEN STANDARD EN1646 -1/1998 FOR HABITATION REQUIREMENTS RELATING TO HEALTH AND SAFETY.

TO ENABLE ANY QUERIES YOU MAY HAVE TO BE DEALT WITH EFFICIENTLY, ALWAYS QUOTE YOUR VEHICLE'S PRODUCTION NUMBER ON ANY CORRESPONDENCE; THIS CAN BE FOUND IN THE GLOVE COMPARTMENT.

PLEASE READ AND COMPLETE THE WARRANTY REGISTRATION CARD SUPPLIED WITH YOUR VEHICLE; THIS SHOULD BE RETURNED TO THE ADDRESS BELOW, WITHOUT DELAY.

Auto-Sleepers Limited
Orchard Works
Willersey
Broadway
Worcestershire
WR12 7QF

Telephone Number: 01386 853338
Fax Number: 01386 858343
E-mail: after-sales@auto-sleepers.co.uk

0845 2579326

LIST OF CONTENTS

INTRODUCTION

1 **MODEL**

1.1 This Handbook covers the Volkswagen Sherbourne. This model is based on the Volkswagen long wheelbase chassis cab, built to motorhome specification.

2 **CONVERSION TYPE**

Styrofoam and glassfibre combination; Styrofoam panels have GRP outer skin. Sherbourne has 2 berths as standard and 1 as optional, with 3 seats designated for use whilst the vehicle is in motion.

3 **CLIMATIC CONDITIONS**

3.1 The Sherbourne is designed for use in temperate climates, and is certified Grade 2 in accordance with EN 1646-1: 1998. Grade 2 indicates that the heating system will raise the interior temperatures from 0°C to 20°C within two hours. If the Sherbourne is fitted with inboard water tanks it can achieve Grade 3 rating, provided a 230v hook up is available. Grade 3 indicates that the heating system will raise the interior temperature to 20°C with an outside temperature of minus 15°C within 4 hours.

4 **HISTORICAL**

4.1 The Volkswagen Sherbourne was launched at the 1999 Earls Court Caravan and Leisure Show.

5 **HANDBOOK**

5.1 Please ensure that you are fully conversant with the contents of this handbook prior to using your Auto-Sleeper. Any queries should be addressed to your supplying Auto-Sleeper dealer.

5.2 **Appliance Instructions**

5.2.1 The appliance instructions in this handbook have been extracted from those supplied with the appliance, and amended as appropriate, to refer to the Sherbourne.

6 **AUTOMOTIVE MATTERS**

6.1.1 For all automotive matters, you should refer to the base vehicle instruction manual.

6.1.2 **TYRE PRESSURES**

6.1.3 The Auto-Sleeper conversion does not affect the tyre pressures in any way since the conversion is built within the design envelope of the base vehicle. When referring to your base vehicle instruction book for tyre pressures, use the specification for the Transporter Long Wheel Base chassis cab.

CHECK LISTS

1 **BEFORE YOU LEAVE**

1.1 Listed below are actions it is recommended you take before driving your motorhome.

2 **GAS**

2.1 Ensure all appliances are turned off and the gas is turned off at the cylinder.

2.2 Ensure that there is sufficient gas to meet your needs.

3 **ELECTRICAL**

3.1 Ensure that your mains hook-up cable is disconnected and safely stowed on board.

3.2 Ensure that you have previously tested your RCD's/MCB's for operation.

3.3 If necessary, charge the conversion battery.

3.4 Ensure all mains and 12 volt appliances are switched off.

3.5 Ensure the refrigerator electronic ignition is switched off.

4 **WATER**

4.1 Ensure, if required, that your fresh water tank is full and your waste tank is empty.

5 **PAYLOAD**

5.1 Ensure that your vehicle's Maximum Technically Permissible Laden Mass (MTPLM) is not exceeded - be aware that it is an offence to exceed the MTPLM. You should now refer to Section 11 - Weights - containing the Weight Data for your vehicle.

6 **SAFETY**

6.1 Ensure that all interior and exterior equipment is safely stowed and secured.

7 **GENERAL**

7.1 Referring to your base vehicle manual, check all fluid levels including automotive fuel and tyre pressures. Remember to check that your spare tyre is of the recommended pressure.

8 **WHILST DRIVING**

Whilst the vehicle is being driven ensure that:

8.1 Seat belts are worn by both the passenger and driver - this is a legal requirement.

8.2 Heavy loads are not stored in top cupboards or in areas from which they may become detached.

8.3 Table/s are stowed in the correct position and table legs secured in their retaining clips.

8.4 Furniture lids are lowered, cupboards and flaps are closed and secured.

8.5 The refrigerator door is closed and secured by its travelling catch.

8.6 Roof ventilators are closed and locked in the down position.

8.7 The bathroom is not used whilst the vehicle is in motion.

8.8 Top hinged windows are closed, and securely fastened.

8.9 Children do not roam around the vehicle; they may fall and injure themselves.

9 WHEN YOU GET THERE

9.1 Connection Of Services

9.1.1 230 Volt - Electrical Mains Hook-Up.

Before connecting to the mains, check that the vehicle RCD is switched "OFF". Uncoil the cable to prevent overheating and connect to the vehicle end first then the side outlet. The following should then be carried out:

i. Switch the main isolator switch of the RCD "ON".
ii. Press the test button (located adjacent to RCD switch). This should cause the main switch to trip.
iii. Return main switch to "ON" position.
iv. Switch the 10 amp MCB (MCB1)to the UP position, (ON). This circuit controls the 230 volt socket outlets.
v. Switch the second 10 amp MCB (MCB2) - to the UP position, (ON). This circuit controls the 230 volt supply to the Fanmaster.
vi. Switch the 6 amp MCB (MCB3) to the UP position, (ON). This circuit controls the 230 volt circuit to the refrigerator, water heater, and the battery charger.

vii. MCB's are numbered as follows:
MCB 1 - 10 amps. 230 volt socket outlets.
MCB 2 - 10 amps. Fanmaster
MCB 3 - 6 amps. Refrigerator, battery charger, water heater, and wall light.

9.2 12 Volt Appliances

9.2.1 General

Please be aware that the 12 volt appliances, except the refrigerator, will not operate whilst the ignition is switched on and the vehicle engine running. The 12 volt supply is controlled by the master switch on the electrical control panel.

9.2.2 Gas Appliances

The cylinder valve also acts as the main isolation valve for the gas system and should always be turned off when the vehicle is in motion. When the gas appliances are required, turn on the cylinder valve and all the individual appliance isolation valves.

The isolator tap is in the 'ON' position when the knob runs "along" the pipework.

9.2.3 Water System

i. The water pump is controlled by the master switch in the electrical control panel. When the water system is not required, the pump should be switched off. If the pump is not switched off, the system will remain pressurised and the pump will cycle periodically to maintain that pressure.

ii. The fresh water tank is filled through the lockable cap on the exterior of the vehicle.

9.3 The Country And Coastal Codes

Upon arrival at your destination, you should be aware of the Country Code relating to motorhome owners. This is entitled the '**MOTOR CARAVANNERS' CODE**'

9.3.1 Code Of Conduct - Camp Sites

i.	*Arrivals*	Report to reception immediately on arrival.
ii.	*Vehicle Movement*	Keep to roadways unless otherwise directed. Adhere to speed limits. Note that these are generally 10 m.p.h. (Remember that the stopping distance on grass is considerably greater than on tarmac). Only a person in possession of a current driving license may drive on the site. Park correctly as advised on your pitch. Where possible leave 20 ft of free space around your vehicle.
iii.	*Use of Site Appliances*	Use the electrical mains hook-up in the correct manner and with caution. Ensure that all fresh water taps/connections are turned off after use. Have care and consideration when using all facilities (toilets and showers etc.) and leave them clean and tidy. Young children should be escorted.
iv.	*Waste Disposal*	If the vehicle is not fitted with a waste water tank, a suitable receptacle should be placed below all waste water outlet pipes. Do not let these containers overflow. Dispose of all waste water where instructed. To avoid possible damage to sewage purification works, only approved chemical fluids must be used. Under no circumstances may coal tar, phenol or caustic-based fluids be used. Disposable napkins and similar bulky items must not be put into chemical closet emptying points but should be wrapped in a polythene bag and placed in the container provided. Put all litter in containers marked for the purpose.
v.	*Noise*	Do not make excessive noise. Children should be restrained from making excessive noise. Flying kites and model aircraft and the use of items like catapults or air-guns as well as ball games should not be permitted among, or close to, motorhomes. Musical instruments, record players, radios and televisions should not be used to the inconvenience of other people on site. Open and close doors quietly.

		Power generators must be adequately silenced and used with consideration.
vi.	*Dogs and Pets*	All dogs and other pets should be kept under control. Unless permission has been granted, no animal should be allowed loose on the site and leads must not exceed 10 ft. No animal should be allowed in the shower/toilet blocks. Do not let dogs foul the site.
vii.	*Fire Precautions*	Adhere to and make note of all fire precautions concerning the whereabouts of the fire points. Although not compulsory, it is recommended that a kg dry powder fire extinguisher is carried. It should comply with BS 5423 and be marked BSI or FOC approved. It is important to check at regular intervals that the extinguisher is working as is required by types meeting BS 5423. Careful thought is necessary for the positioning of the extinguisher, which should be near the door but not too close to the cooking equipment where sudden flames could make it unreachable. In the kitchen area, a fire blanket is a worthwhile precaution. Unless permission has been granted, barbecues should not be used. When permission has been given consideration should be given to the annoyance that can be caused to other users of the site. Open fires are not allowed.
viii.	*Awnings & Tents*	Awnings and tents should only be used when permission has been obtained. When on grass and staying for more than a few days, the ground sheet and/or side flaps of awnings should be periodically raised in order to avoid damage to the ground.
ix.	*Departure*	Leave the pitch clean and tidy. On leaving, check out with the reception paying the required dues.
x.	*Wild Camping*	Camping away from licensed sites, without the permission of the land owner or his agent, is not allowed in the United Kingdom. When permission has been granted, all aspects of this Code should be adhered to. On no account should: i. Litter be disposed of other than in receptacles provided. ii. Water be allowed to escape from the vehicle. iii. Chemical toilets be emptied except into the disposal places agreed with the land owner. iv. Washing or similar be hung outside the vehicle.
xi.	*Parking*	Motorhomes should only be parked in approved places. When using the facilities of a motorhome at such times, care and consideration should be given to those around them.
xii.	*Driving*	When using a motorhome on either the public highway or private roads, the Highway Code should be complied with and full consideration given to other road users. In the event of a motorhome travelling slowly and there being a queue of traffic behind, the driver of the motorhome should, where possible, pull over in order to let the other traffic pass.

When the vehicle is in motion it is compulsory that all passengers are seated and seat restraint straps worn.
Before moving off, elevating roofs should be lowered and correctly secured, and top hinged windows closed. Likewise all doors and access lockers for gas containers and chemical toilets must be properly closed.
Exterior steps should be properly retracted and secured.
When the vehicle is being refuelled, or on a ferry, all gas systems must be turned off.
Gas appliances should only be used when the vehicle is in motion when such use is permitted by the manufacturer of the appliance.

xiii. *Handbook* Before using a motorhome all aspects of the handbooks produced by the chassis manufacturer and the converter must be read and adhered to.

xiv. *Environment* Care and consideration should be taken to protect the environment.
Observe the Country and Coastal Codes shown below.

9.11.2 The Country Code

Enjoy the countryside but respect its life and work.

More people that ever before are exploring the countryside, interested in farming, plant life, bird watching or just observing the general wildlife. Whatever your interest, there is a lot to learn, but please observe the following code.

i. Guard against all risk of fires. Hay and heathland catch alight easily and once ablaze are very hard to put out. ***Remember: Fire Spreads Quickly***.
ii. Keep to public paths across farmland.
iii. Use gates and stiles to cross fences, hedges and walls.
iv. Leave livestock, crops and machinery alone. View from a distance.
v. Take your litter home - it is unsightly and harmful to wildlife.
vi. Help to keep all water clean.
vii. Take special care of country roads.
viii. Make no unnecessary noise. Most animals are very timid, noises can disturb them unnecessarily. If you want to get the best out of the country, go quietly.

9.11.3 The Coastal Code

As our coastlines are increasingly used for recreation and education, the following suggestions are made to enable us to enjoy our inheritance and preserve it for posterity.

Do **not** trample about, or move rocks unnecessarily.
Do **not** frighten seals or seabirds.
Do **not** spear fish.
Do **not** spill detergents, solvents or fuel from boats as these can kill marine life.
When sailing, moderate your speed - the wash from a fast boat can destroy banks and nests.

Live molluscs and crustaceans need not be collected as souvenirs - dead shells can usually be found.

Shellfish can take years to grow and fines can be imposed for not observing national regulations.

Do not pull up seaweed unnecessarily.

Make your visit instructive - not destructive.

Look at material, don't remove it. Take notes and photographs, not specimens.

Observe bye-laws and be considerate to others.

National Trust property or Country Parks have regulations to protect the wildlife. Follow these.

3.4 Fire Precautions

You should also make yourself aware of the local fire regulations.

ARRANGEMENT OF EQUIPMENT

1 GENERAL

1.1 The Volkswagen Sherbourne features an 'L' shaped dinette which makes up into a large transverse double bed. A pullout overcab bed, suitable for children, is available as an option, in place of the Luton lockers. The shower/toilet compartment is at the rear, with the kitchen area positioned on the nearside.

2 SEATING ARRANGEMENTS

2.1 Cab Seats

2.1.1 Both the reclining cab seats, fitted with headrests, have full fore and aft movement by releasing the catch on the front of the seat and sliding to the required position; the passenger seat swivels. Adjustable armrests are available as an option.

2.2 Accommodation - Seating/Security

2.2.1 The 'L' shaped settee is fitted with a lap and diagonal seat belt on the forward facing section. It is this seat that should be used in the event of a passenger being carried in the rear of the vehicle. Due to payload limitations, a further seat belt can neither be factory fitted nor retrofitted, (see paragraph 4.4 of this section for operation of the forward facing seat mechanism).

2.2.2 Passengers are advised that it is a legal requirement to wear seat belts (where fitted) whilst the vehicle is in motion.

3 TABLES

3.1 One large table is supplied together with two stainless steel tapered table legs; these are stowed in the wardrobe. For use, place the table legs in the floor base plates, having first removed the safety bungs, and place the table as appropriate on the legs. Do not, under any circumstances, leave the table in position whilst the vehicle is being driven; ensure both table and both legs are safely stowed in the wardrobe.

3.1.1 An additional work surface is fitted adjacent to the caravan door. This top hinged unit may be raised by releasing the lock down catches which are on the inner face of the table and raising the table to the level position. For re-stowing, the reverse should be carried out. In the interests of safety, ensure this table is stored when not required.

4 KITCHEN AREA

4.1 The kitchen area is located at the centre nearside of the Sherbourne, adjacent to the caravan door.

4.2.1 The kitchen sink and drainer are concealed by a double-hinged worktop which allows an extra work surface to be formed. Underneath the sink/drainer is a hinged flap providing storage space for small items; beneath are a pair of cupboard doors giving access to a further shelved storage area. In these cupboards, is a slide out cutlery tray. Adjacent to the sink/drainer is the four burner cooker with grill and oven below. This is concealed by a hinged glass lid; the furniture adjacent to the shower and toilet area is protected by a wall mounted glass splash plate.

4.3 Each gas appliance is protected by its own isolation tap - this single bank of taps is located in the small storage compartment immediately beneath the refrigerator unit. This four bank gas tap assembly, reading from top to bottom, controls the following appliances:-

4.3.1

Top	-	Space Heater
Upper Centre	-	Water Heater
Lower Centre	-	Refrigerator
Lower	-	Cooker

Each tap is in the "on" position when the tap runs in the direction of the pipework and each tap is annotated with the appropriate symbol.

4.3.2 Opposite the kitchen is the Electrolux RM4505 combined freezer/refrigerator unit. (Operating and servicing instructions for this unit are to be found in Section 4). Above this combined refrigerator/freezer unit is further storage compartment; additional upper lockers offer further storage space. The crockery is stowed in a bespoke unit immediately above the sink and drainer unit. Forward of the caravan door is the cocktail cabinet which features four bottle racks and four wine glasses; this unit has acrylic fronted doors. Above is a further storage compartment and beneath is a drawer; at its base is the Truma E2400 Space Heater Unit. On the rear facing end of this unit is a 13 amp socket, adjacent to which is a 12 volt socket and coax cable and coax plug. To this plug is attached a coaxial cable which terminates above the refrigerator in a coil - this is accessible through the upper fridge vent - sufficient length remains to feed through to the roof above. We recommend that a Status television aerial is fitted. On the same panel is a grab handle, to ease entry into the vehicle, a fire extinguisher and a footwell courtesy light.

4.4 SEATING AREA

4.4.1 An inward facing settee is situated at the forward end of the offside of the vehicle. Access to the underside of this settee is by lifting the front edge which, through the settee being rear hinged, allows full use to be made of the storage compartment beneath.

4.4.2 This 'L' shaped settee may be extended inwards towards the centre of the vehicle, to allow a forward facing seat to be used for travelling. This seat incorporates an inertia reel lap and diagonal seat belt. To convert this seat into the travelling position, first press the button on the rear section of the seat back which then allows the seat back and headrest assembly to slide out towards the centre of the vehicle; in this position it will lock. By releasing the catch in the innermost end of the forward facing section of the settee, the base frame/cushions can then be withdrawn. Once fully extended it will automatically lock in the travelling position.

4.4.3 This seat is now in the forward facing travelling position, and it is in this seat that the third passenger should sit; when travelling, the seat belt must be used at all times.

4.4.4 When this forward facing seat travelling facility is no longer required, the reverse should be carried out; release the push button on the back of the seat assembly, push the headrest and back rest to its stowage position and at the same time push the seat base back towards its stowed position.

4.4.5 To enable the seat to be pushed to the stowed position, underneath there is a locking mechanism, which first must be released whereupon the seat will slide back to form the 'U' shaped dinette position.

4.4.6 Beneath the forward facing seat, with access from above through the hinged seat base, is the Truma Ultrastore Water Heater, Shurflo Water Pump, CEC Battery Charger and the Leisure Battery. Also in this compartment, is the ducting leading from the under floor section through to the rear of the vehicle feeding hot air from the Truam E2400 Space Heater. Under no circumstances, should any items be stored in this compartment.

4.4.7 On the forward face of the unit containing the refrigerator/freezer unit is the electrical control panel, above which are the control panels for the Truma Ultrastore Water Heater and the master switch with illuminated red light for the water heater when operating on mains. Electrical control panel instructions are found on page 4.28.

5 SHOWER COMPARTMENT

5.1.1 The shower compartment is positioned at the rear offside of the vehicle. This combines the shower tray with rubberized floor mat, a fully lined showering area, hot and cold water fed through a trigger operated shower head, 12 volt fluorescent light and roof ventilator incorporating a fly screen. Opaque concertina doors give privacy when required. The complete toilet/shower area may be divided from the rear of the vehicle by first releasing the floor catch and then sliding the partition door across to meet up with the unit on the offside of the vehicle. This effectively conceals the whole of the rear of the vehicle.

6. TOILET AREA

6.1.1 The Thetford swivel cassette toilet is situated at the rear nearside of the vehicle in its bespoke washroom facility. This compartment incorporates a top hinged frosted glass window with blind and fly screen and corner basin unit with trigger operated tap supplying hot and cold running water. Beneath are two hinged doors to a shelved storage compartment. A further storage compartment towards the centre of the vehicle is suitable for small items. This whole area is protected by a detachable over carpet that covers the vinyl floor.

7. SLEEPING ARRANGEMENTS

Note: See pages 3.9 to 3.13 inclusive for a diagrammatic plan view of bed make up.

7.1.1 Lower Longitudinal Bed

7.1.2 Move 'L' shaped dinette seat base inwards toward the centre of the vehicle and lock into position.

7.1.3 Release catch in base of inward facing settee and slide inwards, towards the centre of the vehicle; in this position it will lock .

7.1.4 In the gap between the rear of the base cushion and the side wall, place flat, the backrest. Remove the 'L' shaped backrest, cushion and store elsewhere.

7.1.5 For returning to the settee position, the reverse should be carried out. (see paragraph 4.4 for details of locking/releasing the seat mechanism).

7.2 **Optional Overcab Bed.** This optional overcab bed may be specified, at the time of ordering in place of the Luton locker. This bed may be formed as follows:-

7.2.2 Release catches retaining rearmost mattress board in vertical position and lay flat. Place loose mattress in space requiring infil.

7.2.3 Fit infill mattresses on either side. Maximum loading for the overcab bed must not exceed 100Kg/220lbs.

7.2.3 Access to the upper bed must be by the ladder. This must be clipped in the securing lugs on the forward mattress. When occupied, the restraint net must be used. When not in use, the access ladder should be stowed in the offside settee base.

7.2.4 The overcab bed must not be occupied when the vehicle is in motion, nor used for the storage of heavy items which, in the event of an accident, may become a safety hazard.

8 WINDOWS AND VENTILATION

8.1.1 Double glazed acrylic windows are fitted as standard to all lower caravan windows. These hinged windows allow excellent ventilation and are secured by locking overcentre catches. They may be kept open in a variety of positions by use of the ratchet catches. To operate the catch, depress the locking button in the centre of the handle pivot point.

8.1.2 The hinged acrylic windows must be locked closed whilst the vehicle is in motion, or, if required, locked in their intermediate travelling position, for extra ventilation.

9 Ventilation

9.1.1 The Sherbourne is fitted with a Seitz Heki 2 roof ventilator and in the rear, three MPK roof lights, one in the living area, one in the toilet area and one in the shower (for operation of the Heki 2 roof ventilator see paragraph 4.30).

10 MPK Roof Lights

i. Each MPK roof light is fitted, in the living area, with a night blind and flyscreen; that in the shower has flyscreen only; these give generous ventilation when required. Each roof ventilator has a hinged fly screen, and the four-way opening facility may be achieved by moving the adjustment handle to the required position.

ii. In hot weather and wherever possible, the vehicle should be parked in the shade and it is recommended that, in order to avoid extreme heat in hot climates, the curtains are drawn when the vehicle is not in use. On no account should any ventilators be obstructed.

11 INSULATION

11.1.1 The Sherbourne is manufactured largely in Styrofoam, this being a material of high insulation qualities. This insulated, laminated material is used for the basic construction of the floor, body sides, rear inner panel and ceiling. Further insulation is provided by the GRP outer skin which is applied to the rear, roof and Luton of the vehicle.

12 REAR CORNER STEADIES

12.1.1 The rear corner steadies, which can be lowered by using the special wheel brace, are designed to give greater stability to the vehicle when stationary on site. The wheel brace for lowering the rear corner steadies is stored, secured by clips, in the settee base, retained on the inner face.

12.1.2 On no account should the rear corner steadies be used to jack up the vehicle when carrying out maintenance or changing a wheel etc.

13 ROOF RACK AND LADDER

13.1.1 When using the roof rack, care should be taken to see that all the items are securely anchored. Apart from general cleaning and polishing, the stainless steel roof rack and ladder require no special maintenance.

13.1.2 Maximum load within the area encompassed by the roof rack should not exceed 280lbs with a maximum loading of 17lbs per square foot.

13.1.3 When a top box is fitted, ensure that the top box sits on the roof of the vehicle and not resting on the roof rack bars. This places undue strain on the roof rack and could cause cracking in the areas when the roof rack is attached to the roof.

14 JACK AND TOOLKIT

14.1.1 The jack, handle and wheel brace are stored in the tool pack in the offside rear settee base.

15 SPARE WHEEL

15.1.1 The spare wheel is located beneath the floor at the rear of the vehicle. This is a repositioned standard Volkswagen unit. Details are shown on pages 58/59 of the Volkswagen instruction book. For convenience these are repeated below.

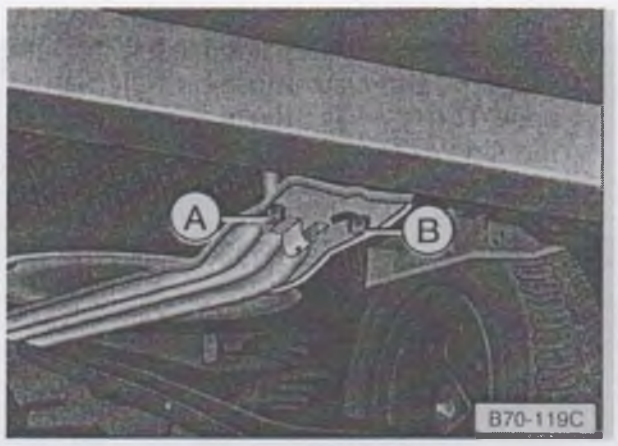

Lowering spare wheel bracket

When loosening bolts observe the following sequence:

•Loosen safety screw (B) until it turns freely. The safety screw (B) is held at the end with a clip so that it cannot be screwed out completely.

•Remove securing screw (A) completely . The spare wheel carrier then rests on the safety screw (B).

Warning: If the screws are loosened in the opposite sequence, the carrier can fall off screw (B).

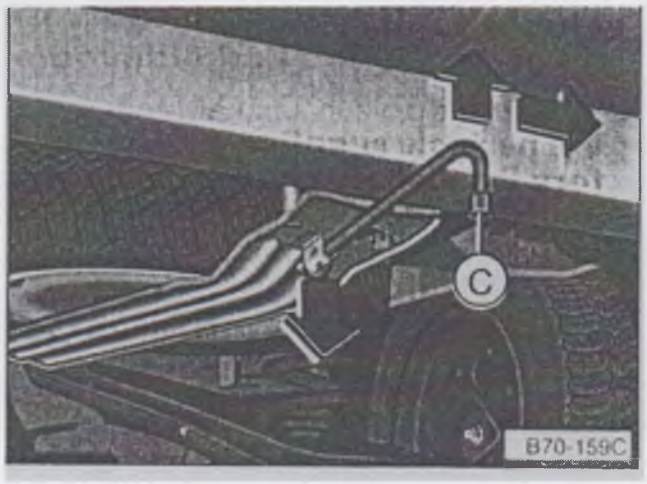

•Then insert the wheel spanner (C) in the carrier to the stop as shown in the illustration.

•Grip wheel spanner firmly with both hands, lift slightly and swing to the right until the spare wheel bracket with the large hole can be swung over the safety screw and down.

•Take spare wheel out.

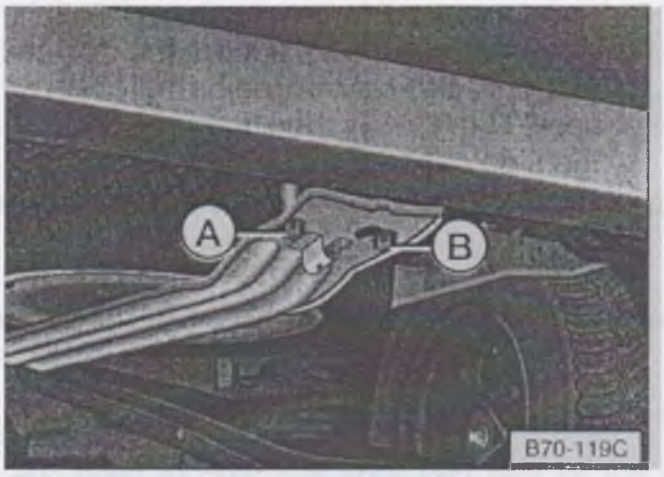

Lifting spare wheel carrier.

•Insert wheel spanner in spare wheel carrier.

•Place spare wheel on carrier with wheel recess uppermost, swing carrier up and hook it on safety screw (B).

•Screw in securing screw (A) first, then safety screw (B).

•Then tighten both screws fully.

Warning: For safety reasons, the spare wheel carrier must always be firmly secured with screws A and B so that the spare wheel cannot fall down accidentally.
Note: The distance between the spare wheel carrier and the underside of the vehicle is height adjustable. In this way it is possible to secure wheels of different sizes.

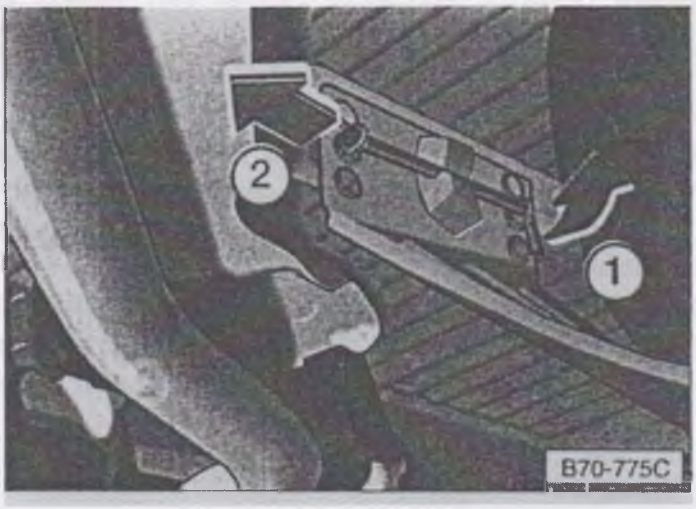

Adjusting spare wheel carrier:
If a spare wheel other than the one fitted at the factory is to be installed in the spare wheel carrier, the distance between the carrier and the underside of the vehicle should be adjusted to suit the size of the new spare wheel.

The distance can be adjusted by placing the retaining lugs of the carrier in different stops.

We recommend that this adjustment of the spare wheel carrier be carried out by a Volkswagen dealer as special skills and tools are required.

To do this, bend out the stop pin to the side in the direction of the arrow (1).

Then pull the stop pin out in the direction of the arrow (2). The spare wheel carrier is now height adjustable.

Please ensure that the stop pin has been properly reinserted and bent back after the height has been adjusted.

16 MARKER LIGHTS

16.1.1 Marker lights are fitted to both the front and rear of the vehicle. These lights illuminate when the side and/or headlights are switched on. In the event of a bulb failure, the lenses unclip from the main body of the light giving access to the bulb. The bulb is 12v 5 watt.

16.1.2 High Level Brake Light. The rear, high level brake light is an LED unit, bonded into the rear coachwork. This is a solid state unit and through being LED, has an infinite life. In the event of damage, or if the light requires removal, contact your Auto-Sleeper Dealer.

17 CYCLE RACK

17.1.1 In order that a cycle rack can be fitted, the rear of Sherbourne's coachwork has been strengthened accordingly. A 700mm x 12mm thick timber is bonded into the bodywork immediately above the rear light units, laterally across the vehicle. This allows the lower mounting brackets for the Fiamma 200CL/UL cycle rack to be fitted in a suitably reinforced area. In the event of a cycle rack being fitted, the cycle rack when folded will increase the vehicle length by 400mm. Your supplying Auto-Sleeper dealer has factory drawings showing the exact location of the timber reinforcement.

18 AWNING

18.1.1 A three metre Fiamma F45 awning is recommended. The awning should be attached to the nearside lower section of the roof. Awning wedges are required, and the awning wedge brackets should be bolted through to the interior of the vehicle. On the inner face of the Styrofoam wall, reinforcing plates should be fitted through which the supporting bolts should pass with spacer tubes in the wall cavity. These awning plates may then be concealed with the ABS covers found in the awning kit. Your Auto-Sleeper dealer will give further advice or assistance if required.

19 TOWBARS

19.1 If a tow bar is fitted, it should be of a type, approved by the base vehicle manufacturer, and must be fitted directly to the base vehicle chassis. Auto-Sleeper chassis extensions should never be used to support the towbar.

20 GAS COMPARTMENT

20.1 The gas compartment is situated at the rear offside of the Sherbourne. it is designed to hold two 7kg bottles which must, for travelling, be secured in their clips. For winter use, Propane is recommended through having a lower freezing point.

21 EXTERNAL STORAGE LOCKER

21.1 On the offside centre is an external storage locker which gives access from outside into the offside settee underside. Ensure that when closed, the access door is secured by both locks being applied. Regular lubricating of these locks is recommended, to prevent seizing.

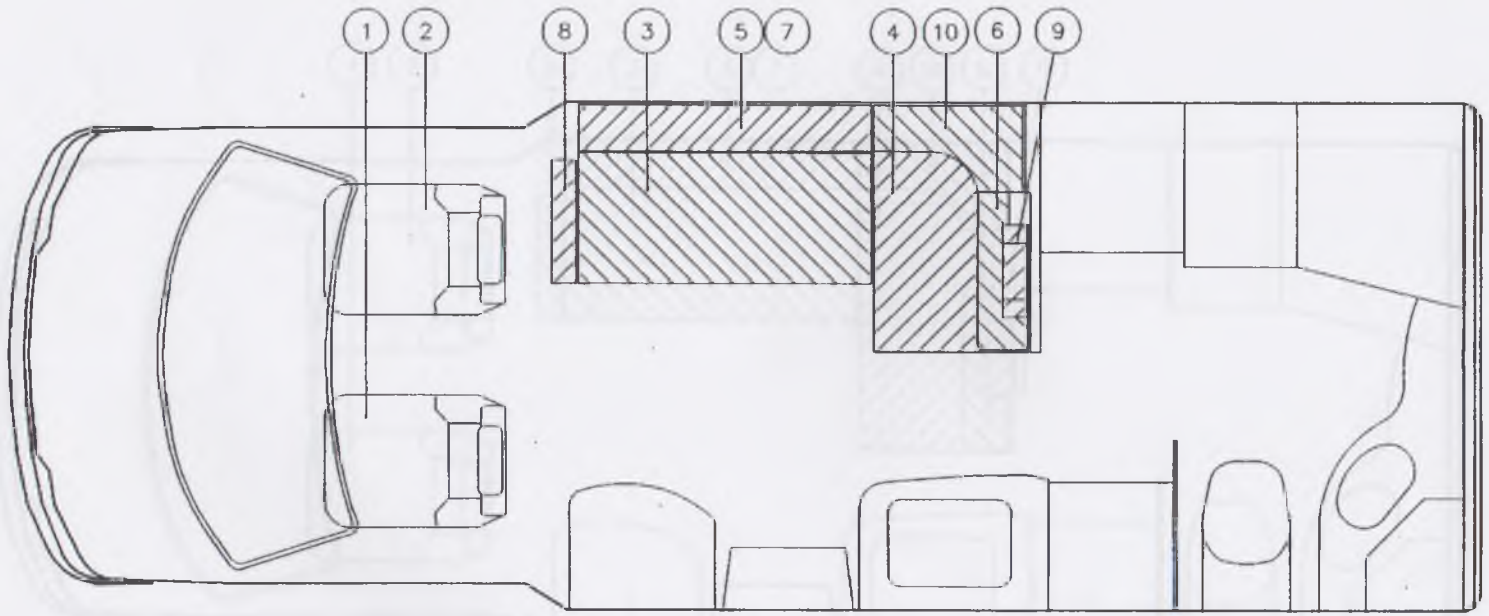

DRG No SAD11666/A	SHERBOURNE CUSHION ASSEMBLY – NORMAL SEAT	© AUTO-SLEEPERS LIMITED NOVEMBER 1999

3.9

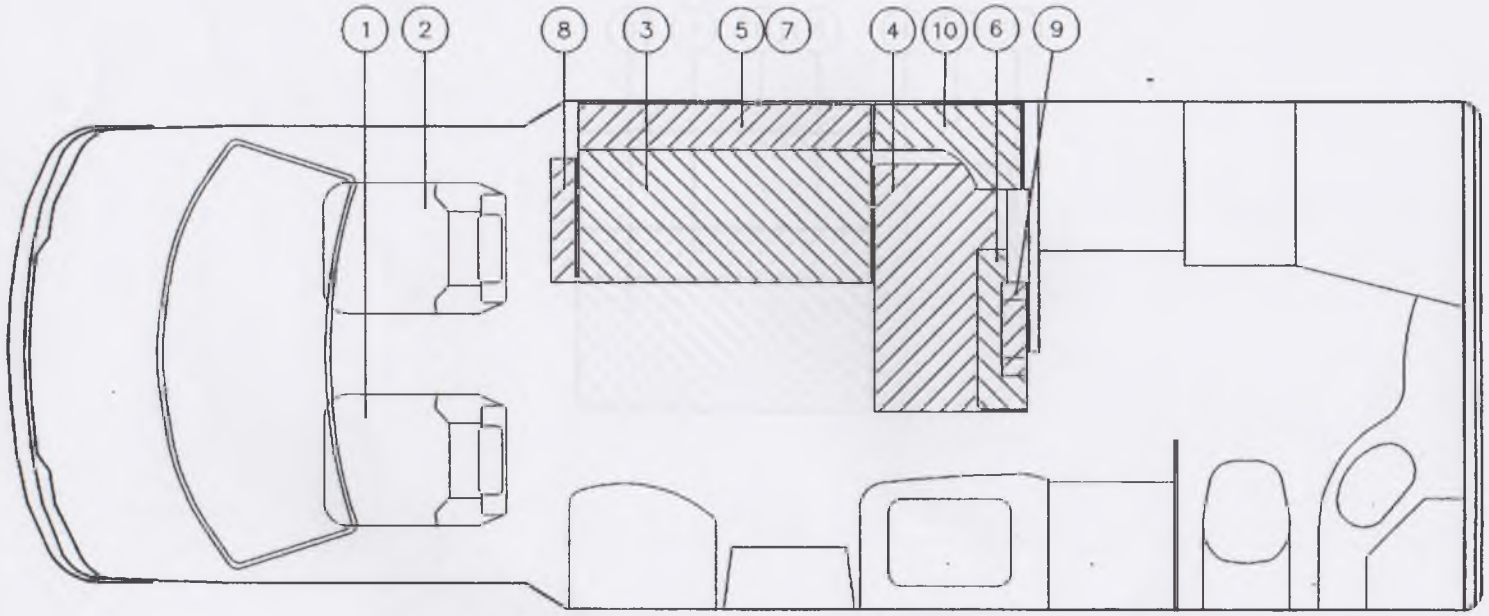

DRG No SAD11686/B	SHERBOURNE CUSHION ASSEMBLY–ALTERNATIVE SEAT	© AUTO-SLEEPERS LIMITED NOVEMBER 1999

3.10

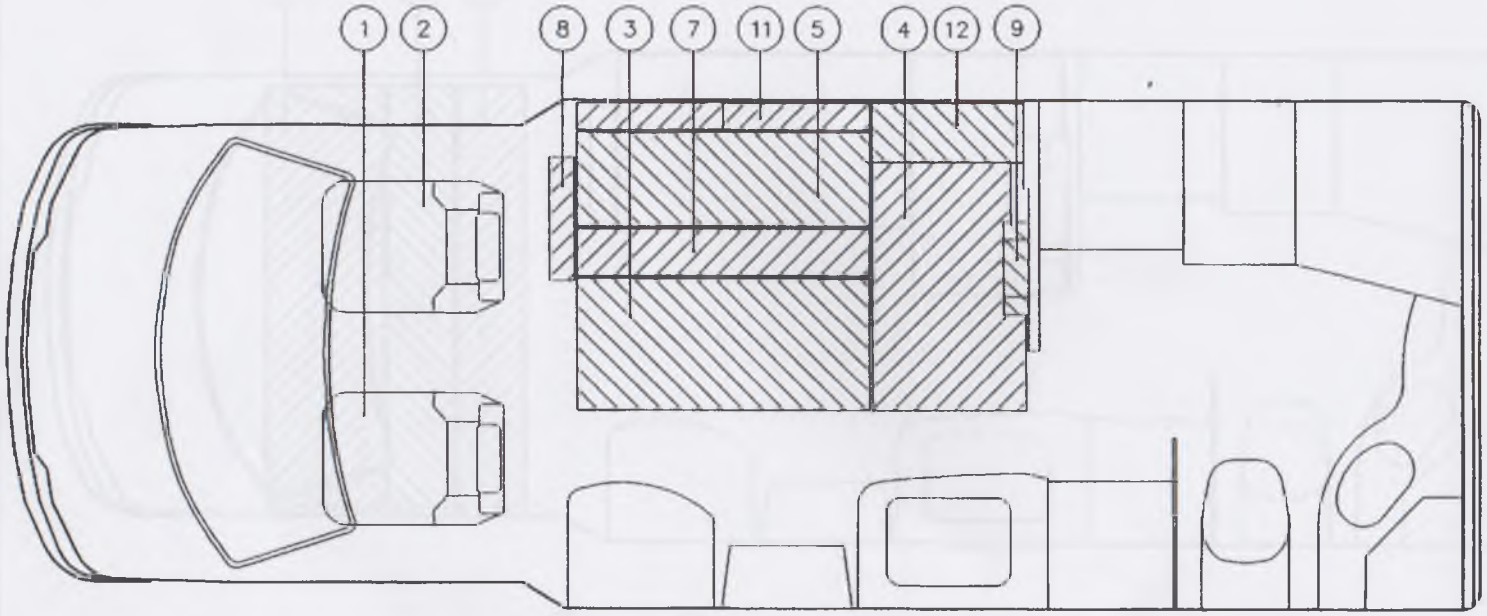

DRG No SAD11666/C	SHERBOURNE DOUBLE BED ASSEMBLY	© AUTO-SLEEPERS LIMITED NOVEMBER 1999

3.11

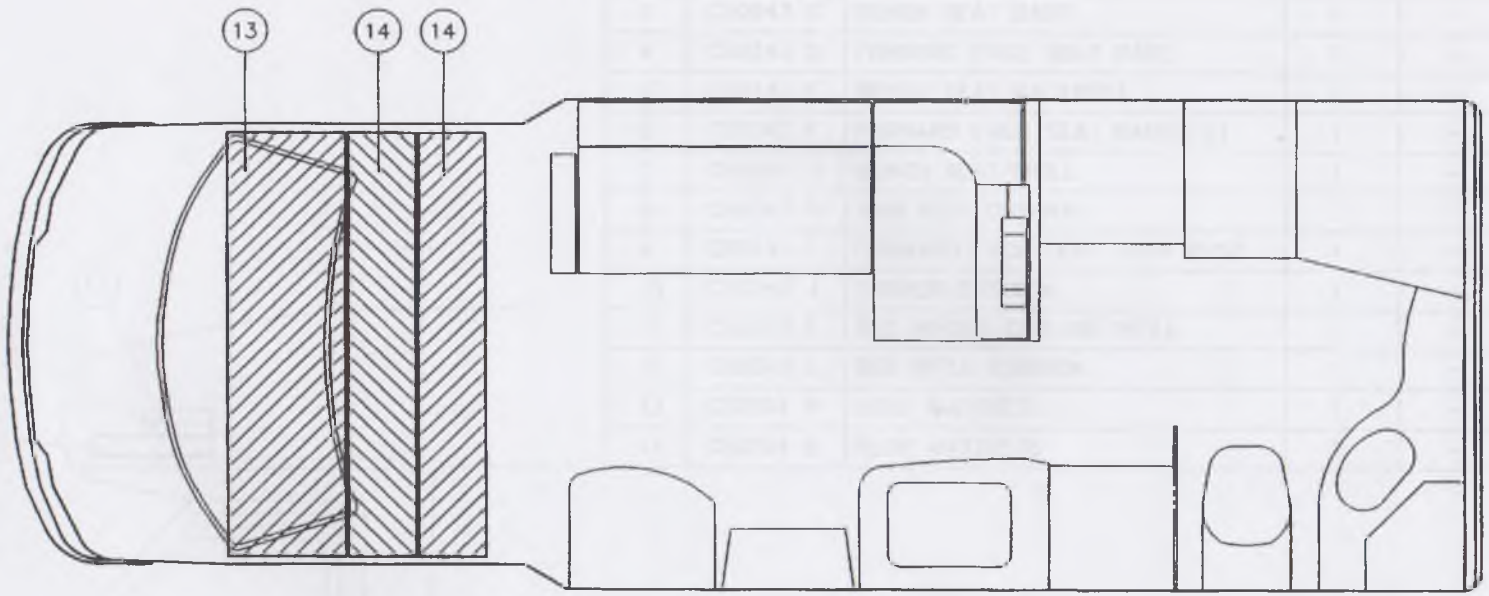

DRG No SAD11666/D	SHERBOURNE OVERCAB BED ASSEMBLY	© AUTO-SLEEPERS LIMITED NOVEMBER 1999

3.12

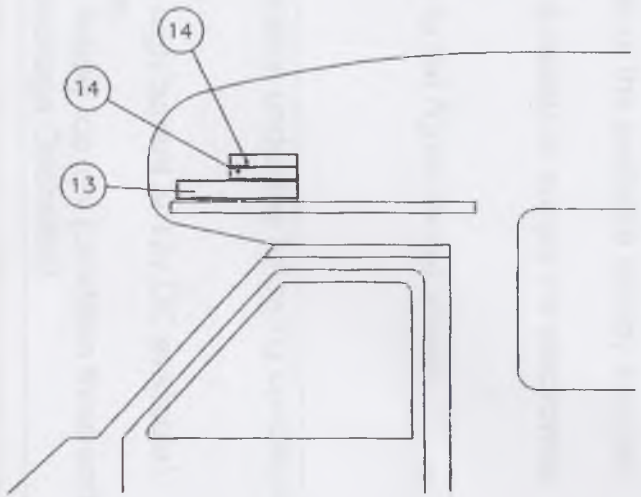

Item	Part No	Description/Cushion type	Qty	Notes
1	CS0243 A	CABSEAT L/H	1	–
2	CS0243 B	CABSEAT R/H	1	–
3	CS0243 C	BENCH SEAT BASE	1	–
4	CS0243 D	FORWARD FACE SEAT BASE	1	–
5	CS0243 E	BENCH SEAT BACKREST	1	–
6	CS0243 F	FORWARD FACE SEAT BACKREST	1	–
7	CS0243 G	BENCH SEAT INFILL	1	–
8	CS0243 H	ARM REST CUSHION	1	–
9	CS0243 I	FORWARD FACE SEAT HEAD REST	1	–
10	CS0243 J	CORNER CUSHION	1	–
11	CS0243 K	BED HINGED CUSHION INFILL	1	–
12	CS0243 L	BED INFILL CUSHION	1	–
13	CS0194 A	ROOF MATTRESS	1	–
14	CS0194 B	ROOF MATTRESS	2	–

DRG No SAD11666/E

SHERBOURNE PARTS LIST

3.13

APPLIANCES

1 GENERAL

1.1 This Section covers the operating instructions of all the appliances fitted to your Auto-Sleeper. These instructions are repeated in the appliance documentation found in your vehicle pack. Before using any appliance, please refer to these operating instructions, which for your convenience are repeated below. It is not necessary to return the warranty certificates to each appliance manufacturer; this warranty cover is included within the Auto-Sleeper warranty agreement.

2 ELECTROLUX RM4505 REFRIGERATOR

2.1 Operating Instructions

The refrigerator is equipped with an Automatic Energy Selector (AES) which controls its operation and energy supply. The system selects the available energy source in the order:

230v - 12v - LP gas

No manual operation is necessary for selecting the energy source.

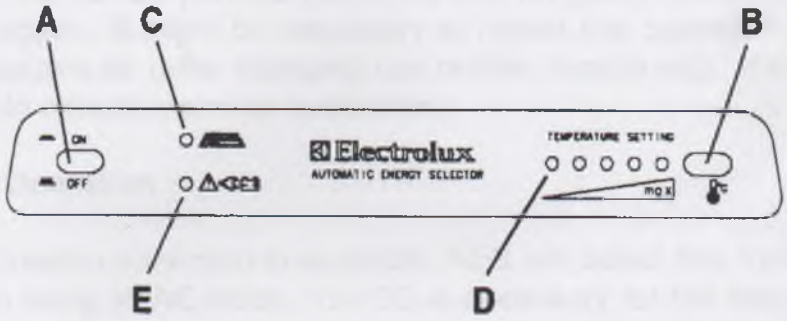

2.1.2 The refrigerator is set into operation by pushing button (A) (main switch). The AES LED (C) lights green showing: AES system working. Push button (B) is used for setting the electronic thermostat. The thermostat LED's (D) show the chosen temperature position. When there is a demand for refrigeration, AES will connect the most favourable of the available energy sources.

2.1.3 Note: 12v must always be available to supply the electronics.

2.2 Starting the Refrigerator

The position numbers refer to the figure shown above.

2.3 LP Gas Operation

AES will select LP gas operation under the following conditions:

- No AC (230v) available.
- Engine not running (no high current at 12v DC available).
- AC available but too low.
- Engine running but DC supply too low (condition three and four are briefly described in item Undervoltage Operation).

2.3.1 When the system chooses LP Gas Operation, the flame failure device is automatically opened, allowing the gas to flow to the burner. At the same time, the electronic igniter is energised.

2.3.2 After initial installation, servicing, or changing gas cylinders etc., the gas pipes may contain some air which should be allowed to escape by briefly turning on the refrigerator or other appliances. This will ensure that the flame lights immediately.

2.3.3 If the flame goes out (by gust of wind etc.), the igniter is immediately activated and reignites the gas.

2.4 Gas Trouble-Shooting

2.4.1 If the AES LED (C) is flashing red, the system may not be able to start or continue gas operation. Set the switch (A) to OFF, and check that there is enough gas in the gas bottle, that its valve is open and that any valves in the gas line to the refrigerator are open.

2.4.2 Then, push button (A) to "ON" again. After 10 seconds AES will repeat the ignition sequence. When the AES LED (C) again starts flashing red after 30 seconds, the trouble persists (air in the line, no gas?). Switch (A) briefly off and then on again. It might be necessary to repeat this operation 2 - 3 times if the tubing contains air (after changing gas bottles, repairs etc). If this does not help, you should consult a service technician.

2.5 230 Volt Operation

2.5.1 When a mains connection is available, AES will select this mode. Please note, that even being in AC mode, 12v DC is necessary for the internal supply of the electronics.

2.6 12 Volt Operation

2.6.1 AES will select the 12v mode of operation only when the vehicle engine is running (detected by the alternator connector of the fridge D+).

2.7 Switching Between Energy Sources

2.7.1 When switching from one energy source to another, there are some delays implemented in the AES system. The 15 minute delay between switching off the engine and starting gas mode is intended to delay the starting of gas mode e.g. when stopping at a filling station.

WARNING: It is not allowed to have a naked flame at a gas filling station. If you are not sure, and your stop is shorter than 15 minutes, you are advised to switch off the main switch (A), when stopping at a filling station.

2.8 Undervoltage Operation

2.8.1 The AES system is designed to guarantee the maximum cooling efficiency under any circumstances. Therefore, the system monitors continuously the voltage level while being in either 12v DC or 230v AC mode. If the voltage is too low, the system switches to Gas mode shown by the yellow LED (E). The system stays in Gas mode, until the electrical supply voltage has recovered to normal level.

2.9 Winter Operation

2.9.1 Please check that the ventilation grilles or the flue outlet are not blocked by snow, leaves etc.

2.9.2 Motorhomes with outside ventilation may have Electrolux winter covers, to protect the cooling unit against cold air. The covers may be fitted when the outside temperature is below approximately 10°C and should be fitted when the temperature is below the freezing point.

We suggest that you fit the winter covers also in the case that the vehicle is laid up during the winter months (see Section 9.5, Winterisation).

2.10 Regulating the Temperature

The position number refers to the figure in 2.1.1.

2.10.1 It will take a few hours for the refrigerator to reach normal operating temperature, so we suggest that you start it well in advance of a trip and if possible store it with pre-cooled foodstuffs.

2.10.2 The temperature of the refrigerator main compartment is set for all three sources of energy, by means of the thermostat knob (B). After turning on the refrigerator the system automatically chooses the mid-position. With some experience, you will soon find a suitable setting. This normally does not need resetting because the same thermostat controls the main compartment temperature for any of the three sources of energy.

2.11 Travel Catch

2.11.1 The refrigerator is equipped with a travel catch. Make sure that this is engaged when your vehicle is on the move. This travel catch secures both the freezer and refrigerator door.

2.12 Food Storage

2.12.1 Always keep food in closed containers. Never put hot food in the refrigerator; allow it to cool first.

2.12.2 Never keep items in the refrigerator which might give off flammable gases.

2.12.3 The frozen food compartment is intended for the storage of frozen food and for making ice. It is not suitable for freezing items of food.

2.12.4 Never put bottles or cans of fizzy drinks in the frozen food storage compartment, as they may burst when freezing.

2.12.5 Most kinds of frozen food can be stored in the frozen food compartment for about a month. This period of time may vary, however, and it is important to follow the instructions on the individual packages.

2.13 Ice Making

2.13.1 It is practical to make ice during the night - then the refrigerator is less demanded and the cooling unit has more reserves. Fill the ice tray to just below the brim with drinking water and place it on the freezer shelf.

2.13.2 To speed up the ice making, you can spill one or two spoonfuls of water on the freezer shelf to improve the contact to the ice tray. If you have more than one ice tray, it is a good idea to make ice in advance and save the frozen trays in the frozen compartment.

2.14 Defrosting

2.14.1 Frost will gradually accumulate on the refrigerating surfaces. It must not be allowed to grow too thick as it acts as an insulator and adversely affects refrigerator performance. Check the formation of frost regularly every week and when it gets about 3mm thick, defrost the refrigerator.

2.14.2 To defrost the refrigerator, turn it off and remove the ice trays and all food items, leave the cabinet and freezer doors open.

2.14.3 Do not try to accelerate defrosting by using any kind of heating appliance, as this might damage the plastic surfaces of the refrigerator; neither should any sharp objects be used to scrape off the ice.

2.14.4 The defrost water runs from a collector channel to a receptacle at the rear of the refrigerator where it normally evaporates.

2.15.5 If heavy frost builds up on the freezer plate and the cooling fins, with a lot of defrost water, move the plastic drain tube in to a water tight bucket or container, (access through the lower ventilation grill on the outside of the vehicle). As the frost melts, the water will flow into the container. Replace the drain tube to its original position after defrosting.

2.15.6 Defrost water in the freezer compartment should be mopped up with a cloth.

2.15.7 When the ice has melted, wipe the refrigerator dry and restart it. Place the food items back inside but wait until the refrigerator is cold before making ice cubes.

2.16 Cleaning the Refrigerator

2.16.1 Clean the inside of the refrigerator regularly to keep it fresh and hygienic.

2.16.2 Soak a cloth in a solution consisting of a teaspoon of bicarbonate of soda to half a litre of warm water. Wring out the cloth and use it to clean the interior of the refrigerator and its fittings.

2.16.3 Never use detergents, scouring powder or strongly scented eradicator as they may damage the surfaces and leave a strong odour.

2.16.4 The exterior of the refrigerator should be wiped clean regularly, using a damp cloth and a small quantity of detergent, but not the door gasket, which should only be cleaned with soap and water and then thoroughly dried.

2.16.5 The cooling unit behind the refrigerator should be cleaned with a brush from time to time, but make sure that the refrigerator is switched off when doing this.

2.17 Turning off the Refrigerator

2.17.1 If the refrigerator is not to be used for some time:

i. Set the switch (A) to "OFF".
ii. Shut off any on-board valve in the gas line to the refrigerator.
iii. Empty the refrigerator. Defrost and clean it as described earlier. Leave the doors of the refrigerator and frozen food compartment ajar.
iv. When the vehicle is laid up for a long period of time (.e.g. during the winter months), we suggest fitting the winter covers on the grills.

2.18 If the Refrigerator Fails to Work

2.18.1 Check the following points before calling a service technician.

i. That the green AES LED goes on, when the switch (A) is sent to "ON" (12v must be available).
ii When mains are connected but the refrigerator stays in gas operation is the refrigerator correctly connected and is the fuse (230v) intact?
iii. Is the 12v fuse intact?
iv. Disconnect the wall plug, and the 12v wires before servicing. Check the fuses on the circuit board, (under the black cover at the top of the refrigerator and behind the control panel). Remove the two screws holding the control panel, pull out the control panel with its electronics. Remove the cover and check the fuses.
v. In transit, if the refrigerator does not operate in DC mode; is the alternator (D+) connection made correctly?
vi. If the AES LED (C) flashes red: check gas supply.

2.18.2 If the refrigerator is not cold enough, it may be because:

i. The ventilation is inadequate owing to reduced area of the ventilation passages (partial blockage of grilles etc.).
ii. The evaporator is frosted up.
iii. The temperature control setting is incorrect.
iv. The gas pressure is incorrect - check the pressure regulator at the gas container.
v. The ambient temperature is too high.
vi. Too much food is loaded at one time.
vii. The door is not properly closed or the magnetic sealing strip is defective.

2.18.3 If the refrigerator still does not work properly, call a service technician.

The sealed cooling system must not be opened, since it contains corroding chemicals under high pressure.

2.19 Maintenance

2.19.1 Always turn to a qualified service technician who is familiar with LP gas systems and refrigerators.

2.19.2 We recommend that a service technician checks the refrigerator once a year.

2.19.3 Inspect the gas hose periodically for cracks or deep chafing marks.

2.19.4 Check that the gas safety shut-off valve is working properly.

2.19.5 Check that the ventilation openings are unobstructed.

2.19.6 The Instruction Manual is available.

2.19.7 Check all connections in the LP gas system for gas leaks. Connections can be tested for leaks using a soap solution. Do not use a naked flame! If there is any suspicion of damage, call for a service technician.

2.19.8 Check that the burner is clean and free from combustible material.

2.20 Some Useful Hints

Make sure that:

2.20.1 Defrosting is carried out periodically.

2.20.2 The refrigerator is clean and dry with the door left open when it is not to be used for some time.

2.20.3 Liquids or items with a strong odour are well packed.

2.20.4 The ventilation openings are unobstructed.

2.20.5 The doors are secured by means of both travel catches when the vehicle is on the move.

2.21 Service and Spare Parts

2.21.1 Service and spare parts are obtainable through your Auto-Sleeper dealer who will contact an Electrolux Service Technician on your behalf.

2.22 Technical Data

2.22.1 Electrical Data:

i.	Input 230v	-	220 watt
ii.	Input 12v	-	175 watt
iii.	Energy Consumption/24hr	-	3kWh

2.22.2 LP Gas Data:

i.	Input, max	-	0.34 kW
ii.	Energy Consumption/24hr	-	300 g
iii.	Cooling Medium:		Ammonia

3 TRUMATIC E 2400 SPACE HEATER

L.P.G. Heater with electronic control, built-in air distribution and thermostat.

Operating Instructions

Always observe the operating instructions and "Important operating notes" prior to starting! The vehicle owner is responsible for the correct operation of the appliance.

A yellow sticker with warning information is attached to the inner face of the wardrobe door.

Control panel with thermostat

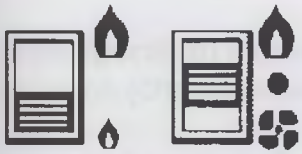

a. Slide valve.
   Heating - Off - Ventilation
b. Slide valve for high setting (large flame symbol) and low setting (small flame symbol).

Switching on the Heating

1. Remove cowl cap.
2. Turn on gas cylinder and open quick-acting valve in the gas supply line.
3. Adjust desired room temperature at rotary knob.
4. Switch the slide valve (a) to heating and the slide valve (b) to the desired output setting. If the outside temperature is low, switch to high setting.

Switching on

Switch the slide valve (a) to Ventilation switch, and the slide valve (b) to high setting or low load.

Switching Off

Move the slide valve (a) to middle position. If the appliance is switched off after a heating phase, the fan can continue running in order to make use of the residual heat.

If the appliance is not used for a prolonged period of time, mount the cowl cap, close quick-acting valve in the gas supply line and turn off gas cylinder.

Green indicator lamp "Operation" (under rotary control knob)

When the appliance is switched on (heating or ventilation) the green indicator lamp must be illuminated (the fan is running). If the indicator lamp is **not** illuminated, possibly check the (main) switch. For this purpose observe respective instructions of vehicle manufacturer.
During the heating operation, while the flame is burning, the green indicator lamp lights up with twice the intensity. This also makes it possible to determine the instantaneous switching point of the room temperature.

Fuses
Fig H1: The appliance fuses are situated on the electronic P.C. board on the appliance.

Important note: Only replace the miniature fuses F1 and F2 with a fuse of the same type:
F1 = 3,15 AF EN 60127-2-1 (fast)
F2 = 1,25 AF EN 60127-2-2 (fast)

Red indicator lamp "Failure"
Should a failure occur, the red indicator is illuminated **permanently**. Possible causes for the failure can be e.g. no gas, insufficient combustion air, heavily soiled rotor, defective fuse etc. Deactivate by switching off and then switching on again.

Flash operation indicates that the operating voltage is too low or too high for the appliance (charge battery, if necessary).

In event of faults, in Germany, always contact the Truma Service Centre, Telephone (089) 46 17-142. For other countries please refer to the International Service.

Important Operating Notes

1. If the cowl is positioned in the direct vicinity of an opening window (or hatch), this window must remain closed during the operation of the appliance (see warning plate).
2. The integrity and tight fit of the exhaust gas double duct must be checked regularly, particularly at the end of long trips. Also check the mounting of the appliance and the cowl.
3. Following a blow-back (misfire) always have the exhaust gas system checked by an expert!
4. If appliances are assembled on the outside of the vehicle, regularly check the flexible air ducts for damage. A damaged duct could lead to exhaust gas entering the vehicle.
5. Always keep the cowl for conducting exhaust gas and supplying combustion air, free from contamination (slush, leaves etc.).
6. The installed temperature limiter shuts off the gas supply if the appliance becomes too hot. Therefore do not shut the warm air outlets and the opening for the returning circulating air.
7. If the electronic control p.c.b. is defective return in well packed. If you fail to do so, guarantee claims shall no longer be valid. Only use original p.c.b. as a spare part!

The vehicle owner is the person responsible for arranging the inspection and the replacing of the parts.

8. Always mount the cover cap for the wall cowl when the appliance is not being used. This applies in particular when washing the vehicle and for boats.

GENERAL SAFETY NOTES

If the gas system is leaking or if there is a smell of gas:

-extinguish all naked fames
do not smoke
switch off the appliances
shut off the gas cylinder
open the windows
do not actuate any electrical switches
have the entire system checked by an expert

1. **Repairs may only be carried out by an expert.**

   Attention: A new O-ring must always be installed after dismantling the exhaust duct!

2. Any alteration to the appliance (including exhaust duct and cowl) or the use of spare parts and accessories which are important to the function of the heater and which are not original Truma parts, as well as the non-observance of the installation and operating instructions, will lead to the cancelling of the guarantee and exclusion of liability claims. It also becomes illegal to use the appliance, and in some countries this even makes it illegal to use the vehicle.

3. **The operating pressure for the gas supply is 30 mbar (or 28 mbar butane/37 mbar propane) and must correspond to the operating pressure of the appliance (see name plate).**

4. **Do not operate the appliance when refuelling the vehicle and when in the garage.**

5. During the initial operation of a brand new appliance (or after it has not been used for some time), a slight amount of fumes and smell may be noticed for a short while. This can be remedied by running the heater at maximum output and ensuring adequate room ventilation.

6. If the burner makes an unusual noise or if the flame lifts off, it is likely that the regulator is faulty and it is essential to have it checked.

Technical Data
Type of gas: Liquid gas (propane/butane)
Operating pressure: 30 or 50 mbar (refer to nameplate)
Rated thermal output: High setting: 2400 W. Low setting: 1200 W.
Gas comsumption: High setting: 200 g/h. Low setting 100 g/h.
Air flow rate: High setting: approx. 130 m³/h. Low setting: approx. 77m³/h.
Current input at 12 V: High setting 1.1 A. Low setting 0.6 A.
Current input at 24 V: High setting 0.7 A. Low setting 0.4 A.
Standby: 0.01 A
Weight: approx. 4.7 kg

Declaration of Conformity
The Trumatic E 2400 has been DVGW-tested and complies with the EC gas appliance guidline (90/396/EEC) as well as with the associated EC guidelines. The following **CE Product Ident. Number:** is available for EU countries: **CE-0085AO0008**
General design approval of the federal office for motor vehicles: S 260

4 CEC BATTERY CHARGER AND POWER SUPPLY UNIT

4.1 INTRODUCTION

4.1.1 The CEC battery charger is located in the forward facing section of the 'L' shaped settee on the offside; access is through the base of the settee; the battery charger is mounted on the inner face of the settee wall adjacent to the gang way. The Inter-Power from Plug-In-Systems Ltd is an extremely light weight and efficient unit, combining power and safety to provide the ultimate in battery chargers. It is especially designed for caravan and motorhome installations, simple to install and requiring minimal attention in use. A rocker isolation switch is fitted to the top face of the battery charger. We recommend this is left "ON" at all times: it only needs to be switched off when the limit may require isolating, for example, for servicing or repair.

4.1.2 The unit incorporates important safety features:

OVERCURRENT PROTECTION
SHORT CIRCUIT PROTECTION
REVERSE POLARITY PROTECTION (BATTERY)

The Inter-Power is designed to work with a battery in circuit and for optimum performance a good quality Leisure battery is recommended.

4.2 Unit Description

4.2.1 With the unit connected to a protected 240 volt electrics, its operation is fully automatic once switched on. The unit is capable of providing up to 12 amps, should this load be exceeded then the Inter-Power will enter current limit mode to prevent damage to itself and associated 12 volt installations.
The Inter-Power will, if necessary, operate on a low mains input (making ideal for low continental voltages) and still provide a stable (regulated) dc output voltage. As a precautionary measure a de fuse is fitted in the output circuit of the Inter-Power, in normal use this fuse should not require attention.

4.2.2 Warning: If using the Inter-Power in conjunction with a generator, first check the output voltage is no higher than 240 volts as failure to do so could result in damage to the unit.

4.3 Operation

a) Connect mains 240 volts ac to the caravan/motorhome via Mains Inlet Socket.
b) Switch the RCD (on the mains protection unit) to the ON position (upwards).
c) Switch the relevant MCB (6 amp) to the ON position (upwards).
d) Switch ON the Inter-Power, at this point power will be available from the Inter-Power via the dc output connectors. If this is not the case, check all connections and fuses.

4.4 Specification

Mains Input	220/240 volts - AC
Frequency	50 Hz
Output Voltage	13.8 volts DC
Output Current	12 amps (max)
DC Output Fuse	20mm quick blow (see label for rating)
Dimensions	Height 175mm
	Width 150mm
	Depth 75mm
Weight (inc. cable)	1.12 Kg

4.5 Product Support Service

4.5.1 Plug-In-Systems Ltd offer to the customer an On-Site Service, available for both Warranty and Non-Warranty repairs (on the CEC and Plug-In-Systems range of equipment only). If you would like to take advantage of this service please ring Plug-In-Systems (direct) on:

(01482) 659309 and ask for PRODUCT SERVICE

5 SHURFLO FRESH WATER PUMP

5.1 General

5.1.1 The water pump is located in the rearmost end of the offside settee, accessible from above by lifting the hinged settee base. Restrictions in a plumbing system may cause the pump to rapid cycle (ON/OFF within 2 seconds) during low flow demands. Cycling should be minimized to prevent pulsating flow, and to achieve maximum pump life.

5.2 Pressure Adjustment

5.2.1 To determine if adjustment is necessary, turn a tap ON to lower than average flow of water. The pump should cycle, but its "OFF time" must be 2 seconds or longer. If the cycling is correct, leave alone. If the pump is cycling rapidly increase the setting by turning the screw clockwise (1½ turn MAX.) until the pump operates for 1 second with at least 2 seconds "OFF time". If cycling cannot be minimized consider removing the plumbing restrictions or simply install a Shurflo Accumulator. (Your Auto-Sleeper dealer will advise you.)

5.3 Spluttering of Water from Taps

There may be instances where the water, on exiting the cold tap, may surge, splutter and generally be delivered in an uneven flow. This is due to a small amount of air in the system which should clear as the water is drawn from the tank. However, a small degree of pulsating may continue but which will not be apparent in the hot water system. The reason is that the Truma Ultrastore Water Heater cylinder permits the air within to be compressed and released which significantly reduces the surges and contributes to a more even flow.

5.3.1 **Caution:** Do not use Automotive Antifreeze to winterize drinking water systems. Such solutions are highly toxic. Ingestion may cause serious injury or death.

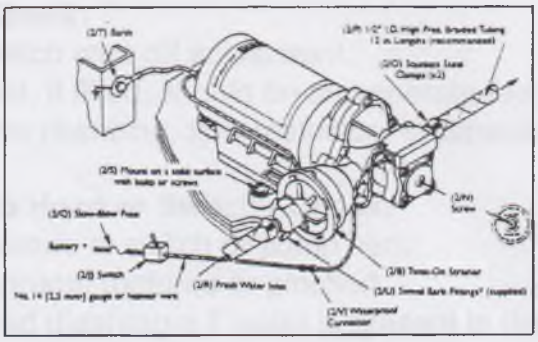

5.4 Troubleshooting

5.4.1 Vibration induced by road conditions can cause plumbing to loosen. In the event of a leak first check for any system components that are loose. Most leaks can be resolved by simply tightening the hardware.

5.4.2 Pump Will Not Start/Blows Circuit- Check:

i. Electrical connections, fuse or breaker, main switch, and earth connection.
ii. Is the motor hot? If it is the thermal breaker may have triggered; it may reset when cool (This is an automatic, not manual service).
iii. Is voltage present at the switch? Try to bypass the pressure switch. Does the pump operate, if it does it indicates faulty switch.
iv. Charging system for correct voltage (± 10%) and good earth.
v. For an open or grounded circuit, or motor; or improperly sized wire.
vi. For seized or locked diaphragm assembly (water frozen?).

5.4.3 Will Not Prime/Splutters - (No discharge/motor runs) - Check:

i. Is the filter clogged with debris?
ii. Is there water in the tank, or, has air collected in the hot water heater?
iii. Is the inlet pipework/plumbing sucking in air at plumbing/connections?
iv. Is inlet/outlet plumbing severely restricted or kinked?
v. Proper voltage with the pump operating (± 10%).
vi. For debris in pump inlet/outlet valves or swollen/dry valves.
vii. Pump housing for cracks or loose drive assembly screws.

5.4.4 Pump Will Not Shut-Off/Runs When Tap is Closed - Check:

i. Output side (pressure) plumbing for leaks.
ii. For air trapped in outlet side or pump head.
iii. For correct voltage to pump (± 10%).
iv. For loose drive assembly or pump head screws.
v. Are the valves or internal check valve held open by debris or is the rubber swollen?
vi. Pressure switch operation/adjustment, refer also to shut-off adjustment instruments for the switch.

5.4.5 Noisy Or Rough Operation- Check:

i. For plumbing which may have vibrated loose.
ii. Is the pump plumbed with rigid pipe causing noise to transmit?
iii. Does the mounting surface multiply noise (flexible)?
iv. For mounting feet that are loose or too tightly compressed.
v. For loose pump head to motor screws (3 long screws).
vi. With the pump head removed. Is noise from motor or pump head?

5.4.6 Rapid Cycling - Check:

i. Pressure switch shut-off adjustment.
ii. Water purifier, if fitted, should be on separate feed line.
iii. For restrictive plumbing, flow restrictors in taps/shower heads.

5.5.7 Leaks From Pump Head or Switch - Check:

i. For loose screws at switch or pump head.
ii. Switch diaphragm ruptured or pinched.
iii. For punctured diaphragm if water is present in the drive assembly.

6 THETFORD CASSETTE MANUAL FLUSH C200-CW TOILET

6.1 Preparing for Use

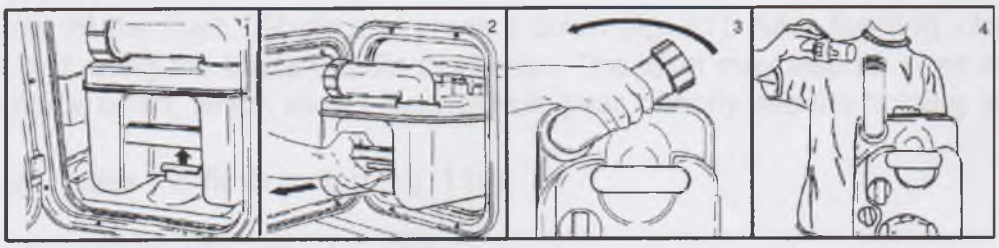

6.1.1 Open access door pull retaining clip upwards (fig. 1).

6.1.2 Remove holding tank by pulling straight out. When holding tank hits the stop, tilt front end downwards slightly and remove (fig. 2).

6.1.3 Position tank vertically and swivel pour-out spout upwards (fig. 3).

6.1.4 Remove dosage cap of pour-out spout. Add required amount of toilet fluid in the dosage cup (fig. 4). Add approximately 2 litres of water through the spout to cover holding tank bottom. Replace cap and return pour-out spout to original stored position. Use only Thetford toilet fluid to achieve the best results. Never add toilet fluid directly into toilet bowl.

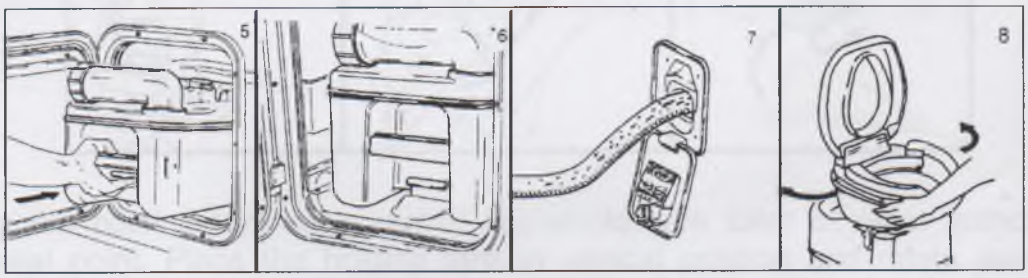

6.1.7 Slide the holding tank into position through access door (fig. 5).

6.1.8 Make sure the holding tank is secured by the retaining clip (fig. 6).

6.1.9 Open the waterfill door and add 50ml of Aqua Rinse. Aqua Rinse results in a better flush and improves the hygiene of the toilet. Then fill the water tank with fresh water using a jerry can or a hose. Tank capacity is 7 litres (fig. 7).

6.2 Operation

6.2.1 Turn the bowl in to the most comfortable position (fig. 8).

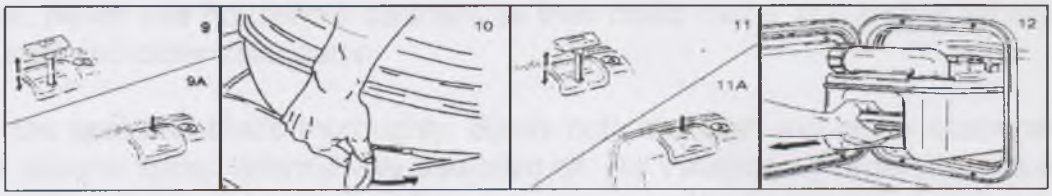

6.2.2 Before using the toilet it is recommended to flush some water into the bowl by lifting and pressing down the flush handle (figs. 9 & 9a).

6.2.3 After use open the blade by sliding the blade-handle anti-clockwise (fig. 10).

6.2.4 To flush, lift the flush handle and press it down (fig. 11). After flushing, close the blade by turning the blade handle clockwise. The toilet may also be used with the valve blade open, which allows the waste to pass directly into the holding tank.

6.2.5 To flush, press the flush button (fig. 11a).

6.3 Emptying the Holding Tank

6.3.1 The holding tank capacity is approximately 17 litres and the tank should be emptied when the waste level indicator lights up. The waste level indicator lights up when the tank contains more than 15 litres of waste. Do not allow the waste holding tank to become overfilled.

6.3.2 Open the access door and remove the holding tank. The holding tank can only be removed when the valve blade is closed (fig. 12).

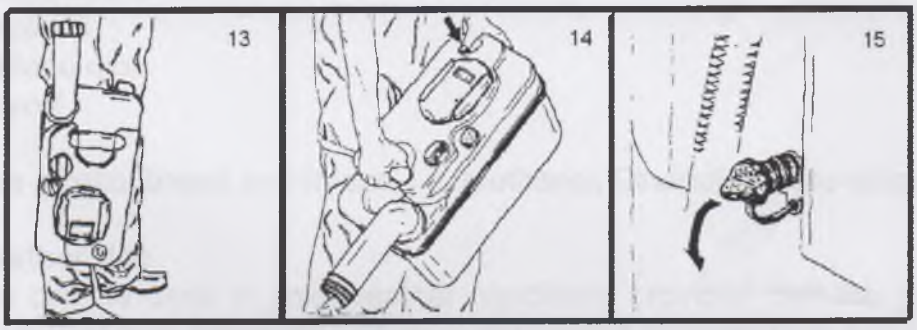

6.3.3 Carry the holding tank to a normal household type toilet or other authorised disposal point. Place the holding tank in vertical position and rotate pour-out spout upwards (fig. 13).

6.3.4 Remove the spout cap. Grasp unit by upper carrying handle nearest to pour-out spout. Place other hand on upper rear hand grip so that vent button can be depressed with the thumb while emptying. This ensures a smooth outflow of the tank contents (fig. 14).

6.3.5 Only depress the vent button only when pour out spout is pointed downwards.

6.3.6 Rinse the holding tank with clean water.

6.4 Cleaning and Maintenance

6.4.1 It is advisable to clean the seal and blade with Thetford bathroom cleaner and rinse with water. Alternatively use a lukewarm solution of diluted washing-up liquid. Never use household cleaners as they could cause irreversible damage to the seal and other toilet parts.

6.4.2 Dry the seal and blade thoroughly. Spray both the seal and blade economically with silicone spray, alternatively use olive oil. No Vaseline or vegetable oils other than olive oil should be used as they may cause problems.

6.4.3 Repeat the operation if the seal/blade is dirty or if opening/closing of the blade is getting more difficult. When putting the toilet into storage or not using for a long period (i.e. winter), then the seal should be kept clean and lubricated. The blade of the toilet should also be left open as this prevents the seal from sticking to the blade if any moisture remains on the blade.

6.4.4 The rest of the toilet can be safety and effectively cleaned with Thetford bathroom cleaner. On parts where rinsing is not practical, use a damp cloth, then wipe dry with a soft piece of fabric or duster for extra shine. Alternatively use a lukewarm solution of washing-up liquid.

6.4.5 It is advisable to drain the fresh water tank prior to travelling. Anti-freeze should not be required if the motorhome is heated. If you do not wish to use anti-freeze, brands containing the following properties may be used in the fresh water tank:

i. Ethylene glycol
ii. Mono-ethylene glycol
iii. Propane-diol
iv. Glycerol
v. Ethane-diol
vi. Glycol

6.4.6 Never use alcohol based anti-freeze, i.e. Methanol, Ethanol and Iso-propanol.

6.6 Cold Weather Use

6.6.1 The toilet can be used in cold weather conditions provided that the toilet is in heated surroundings. When the vehicle is not heated for more than a day or night winterise the Cassette (See Winterization, Section 9.5).

6.7 High Altitude and Hot Weather Use

6.7.1 Pressure may build up in the holding tank if the tank is not inserted while driving at high altitudes or in warm weather conditions. The automatic holding tank vent will vent the tank when there is over or under pressure. High temperatures may require additional Thetford toilet fluid.

6.8 Thetford Warranty (Statement by Manufacturer)

6.8.1 The Thetford Cassette toilet is warranted to the original buyer for one year from the date of purchase.

6.8.2 The warranty covers replacement of parts arising from defects and workmanship and from the inability of the unit to perform its intended function.

6.8.3 In case of a defect, apply to your Auto-Sleeper dealer or Thetford Service Centre, with proof of purchase.

6.8.4 Defects, which in our judgement occurred from misuse, negligence or accident, are not covered by the warranty. In addition, the warranty does not apply if the product is **installed or handled improperly** or if other than the prescribed chemical agents have been used or if the product has been altered in any way or has been repaired by unqualified persons, or if the serial number and/or date has been altered or removed.

6.8.5 Should the original buyer wish to return to us parts believed to be defective, the parts should be sent prepaid. If we find the parts defective and covered by the warranty, they will be repaired and returned. If warranty does not apply or has expired, a nominal charge will be made. Any transport costs are for the account of the owner.

6.8.6 Before returning product or parts they should be cleaned, in order to carry out inspection and repair.

6.8.7 No other warranty is given and no personal representative is authorised to make any warranty other than that is contained herein.

7 SPINFLO 4 BURNER CAPRICE TOWER UNIT

7.1 Operation

7.1.1 Ensure the gas cylinder is turned on.

7.1.2 In the event of a gas smell turn off at isolation tap (lower tap in bank of taps) and at the cylinder. Contact your nearest Auto-Sleeper dealer.

7.2 Hotplate Burners

7.2.1 Glass lids may shatter when heated. Turn off all burners and grill before shutting the lid.

7.2.2 Each burner is controlled individually and is monitored by a flame supervision device. In the event of the burner flames being accidentally extinguished, turn off the burner control and do not attempt to re-ignite the burner for at least one minute. The respective knob positions are shown below:

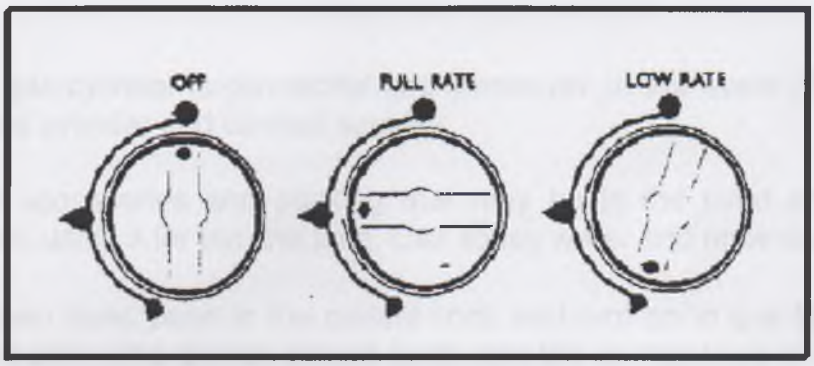

7.2.3 To light the burner, press in and turn the knob anti-clockwise to the full rate position and press the ignition button. It is necessary to hold the knob depressed during ignition and for approximately fifteen seconds after the burner has lit to allow the probe to reach temperature. Should the flame go out when the knob is released, the procedure should be repeated holding the knob depressed for slightly longer.

7.2.4 For simmering, turn the knob further anti-clockwise to the low rate position. To turn the burner off, rotate knob fully clockwise until the dot on the knob lines up with the dot on the control panel. The burners on this appliance have fixed aeration and no adjustment is required. Depending on the gas being used, the burners should flame as follows:

i. **Propane** - The flames should burn quietly with a blue/green colour with no sign of yellow tips.
ii. **Butane** - Normally on initial lighting, a small amount of yellow tipping will occur and then slightly increases as the burner heats up.

7.2.5 Although each burner will support pans from 10 to 22cm, care should be taken not to overload the appliance as reduced performance may result.

7.2.6 When using small pans, the flames should not spread beyond the base of the pan as this will reduce the efficiency of the burner.

7.3 Grill

7.3.1 Accessible parts may be hot when the grill is used! Young children should be kept away.

7.3.2 Glass may shatter when heated. Turn off all burners and grill before shutting the grill flap.

7.3.3 Although the grill does heat up quickly, it is recommended that a few minutes preheat be allowed. The grill pan should be left in position to protect the base lining. The grill is fitted with a flame supervision device, so if for any reason the flame goes out, the gas supply to the grill burner will shut off.

7.3.4 In the event of the burner flames being accidentally extinguished, turn off the burner control and do not attempt to re-ignite the burner for at least one minute. It is normal for the flames on the burner to develop yellow tips as it heats up, particularly on Butane. The grill pan trivet can be reversed to give a choice of grilling height.

7.4 Oven

7.4.1 Ensure the gas cylinder is connected and turned on. In the event of a gas smell turn off at gas cylinder and contact supplier.

7.4.2 Remove all accessories and packing that may be in the oven and clean the interior before using it for the first time. Use soapy water and rinse carefully.

7.4.3 **To light:** Open door, push in the control knob and turn on to gas Mark 9. Press the ignition button. The burner should ignite and the control knob should be held in for 10 - 15 seconds before release. If the burner goes out, repeat procedure holding control knob for at least 1 minute.

7.4.4 Place the oven shelf in the required position and close the door. Set control knob to approximately gas mark 5 and heat the oven for about 20 minutes to eliminate any residual factory lubricants that might impart unpleasant smells to the meals being cooked.

7.4.5 **To turn off**: Turn the control knob until the dot on the control knob is aligned with the dot on the control panel.

7.4.6 **Flame Failure Device (FFD)**: The oven burner is fitted with a flame sensing probe which will automatically cut off the gas supply in the event of the flame going out.

7.4.7 **Oven Shelf**: The oven shelf has been designed to allow good circulation at the rear of the oven and is also fitted with a raised bar to prevent trays or dishes making contact with the back of the oven. To remove a shelf, pull forward until it stops, raise at front and remove.

7.5 Do's and Dont's

7.5.1 *Do* read the user instructions carefully before using the appliance for the first time.

7.5.2 *Do* allow the oven to heat before using for the first time, in order to expel any smells before the introduction of food.

7.5.3 *Do* clean the appliance regularly.

7.5.4 *Do* remove spills as soon as they occur.

7.5.5 *Do* always use oven gloves when removing food shelves and trays from the oven.

7.5.6 *Do* check that controls are in the off position when finished.

7.5.7 *Do not* allow children near the cooker when in use. Turn pan handles away from the front so that they cannot be caught accidentally.

7.5.8 Do not allow fats or oils to build up in the oven trays or base.

7.5.9 Do not use abrasive cleaners or powders that will scratch the surfaces of the hotplate and oven.

7.5.10 Do not under any circumstances use the oven as a space heater.

7.6 Temperature Control

7.6.1 The temperature in the oven is controlled by a thermostatic gas tap and is variable over the range 130°C to 240°C. Approximate temperatures for the settings on the control knob are shown in the table below. The temperatures indicated refer to the centre of the oven and at any particular setting in the oven will be hotter at the top and cooler towards the base. The variation between top and centre, and centre to bottom is approximately equivalent to one gas mark. Good use can be made of the temperature variation in several dishes requiring different temperatures may be cooked at the same time. In this way maximum benefit can be obtained from the gas used to heat the oven. Care should be taken not to overload the oven, adequate spacing being used to allow free circulation for heat.

GAS MARK	TEMPERATURE 6000/6100			
¼ - ½	265-275 °F	130-135 °C	very cool	meringues
1	285		cool	stewed fruit
2	300	150	cool	rich fruit cake
3	330	165	warm	baked custards
4	355	180	moderate	Victoria sandwich
5	385	195	fairly hot	whisked sponges
6	410	210	hot	shortcrust pastry
7	430	220	hot	bread, scones
8	445	230	very hot	puff pastry
9	465	240	very hot	quick browning

DISH	GAS MARK	SHELF POSITION	COOKING TIME
Scones	7	2	8-15mins
Small cakes	5	2	15-25mins
Victoria Sandwich	4	2	20-30mins
Very rich fruit cake	2	2	approx 60mins per 500g
Puff pastry	8	2	15-30mins
Flaky pastry	7	2	15-30mins
Shortcrust pastry	6	2	15-55mins
Shortbread fingers	3	2	25-30mins
Ginger Nuts	5	2	12-16mins
Rice Pudding	2	3	100-120mins
Baked Custard	3	3	50-60mins
Fruit Crumble	5	3	30-40mins
Beef	3 7	3 3	25mins per 500g plus 25mins 15mins per 500g plus 20 mins
Pork	3 7	3 3	30mins per 500g plus 35mins 25mins per 500g plus 25mins

7.7 Cooking Guidelines

7.7.1 The baking tray and roasting tin provided are the largest that should be used in this size oven. Larger items may well affect the circulation and heat distribution. Best results will be obtained by following the shelf positions in this guide. It is not necessary to preheat the oven but advisable for a range of dishes. The oven is capable of full temperature in 15-20 minutes. Most cookery books give details of the shelf positions and gas mark settings for each recipe. If in doubt about a recipe you intend to use, study the recipe carefully then find a similar dish in our guide and use our shelf position and gas mark setting recommendation. Shelf positions are from top down. When roasting with aluminium foil care must be taken that the foil does not impair circulation or block the oven flue outlet.

7.8 Leaks

7.8.1 If a smell of gas becomes apparent, the supply should be turned off at the gas tap and the gas cylinder immediately.

7.8.2 Extinguish naked lights including cigarettes and pipes. Do not operate electrical switches. Open all doors and windows to disperse any gas escape.

7.8.3 Butane/Propane gas is heavier than air; any escaping gas will therefore collect at a low level. The strong unpleasant smell of gas will enable the general area of the leak to be detected. Check that the gas is not escaping from an unlighted appliance. Never check for leaks with a naked flame, leak investigation should be carried out using a leak detector spray or soapy solution.

7.9 Maintenance

7.9.1 This appliance needs little maintenance other than cleaning. All parts should be cleaned using warm soapy water. Do not use abrasive cleaners, steel wool or cleansing powders. When cleaning the burner ring it is essential to ensure that the holes do not become blocked.

7.9.2 The control knobs are a push fit and can be removed for cleaning. They are interchangeable without affecting the sense of operation.

7.9.3 This appliance must not be modified or adjusted unless authorised and carried out by the manufacturer or his representative. No parts other than those supplied by the manufacturer should be used on this appliance.

8 OMNIVENT ELECTRIC EXTRACTOR FAN (OPTIONAL)

8.1 An Omnivent may be fitted as an optional extra in place of the centre (kitchen) MPK roof vent. It features a hinged roof vent operated by a knob. The vent incorporates a 2 way fan motor; its preferred method of operation may be selected by a rocker switch incorporated into the body of the vent. Switch positions represent the following loading:

Position 1	1.6 amps
Position 2	2.2 amps
Position 3	3.6 amps

Note: Ensure the fan is switched off when the vent is closed.

9 TRUMATIC-ULTRASTORE WATER HEATER

The Truma Ultrastore is a liquid gas operated storage water heater with an additional 230v electric heating element. It is fitted on the offside of the vehicle and is identified by an external cowl. The cylinder and all main components are found in the adjacent bed box.

9.1 Operating Instructions

9.1.1 **Always observe the operating instructions prior to starting.** The owner is responsible for the correct operation of the appliance.

9.1.2 A yellow sticker with the warning information is fitted to the wardrobe door. Read this before use.

9.1.3 **Attention:** Always mount the cowl cap when the water heater is not being operated and drain the water heater if there is a risk of frost.
Claims under guarantee for damage caused by frost, cannot be accepted either by ourselves or Truma.

9.1.4 In the event of changing the water pump with one of a different type, ensure that a pressure of 2.8 bar is not exceeded. We recommend the Shurflo water pump model Trailking 7.

9.2 Safety/drain valve

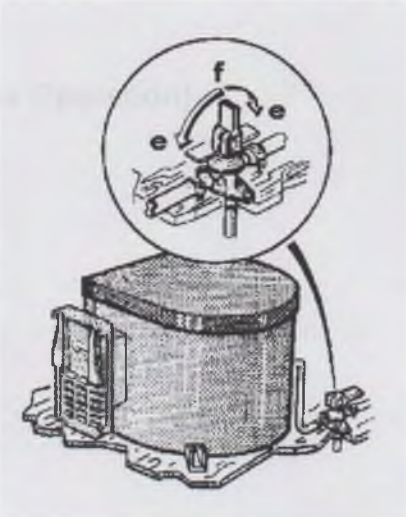

e =Lever position "Closed"
f =Lever position "Drain"

9.3 Filling the Truma-Ultrastore with Water

9.3.1 Check that the safety/drain valve in the cold water intake is closed: Lever should be in horizontal position, position (e).

9.3.2 Open hot tap in bathroom or kitchen, with pre-selecting mixing taps or single-lever fittings to "hot".

9.3.3 Switch on water pump on electrical control panel.

9.3.4 Leave the tap open to let air escape while the water heater is filling. The heater is filled when water flows out of the tap.

9.3.5 Residues of frozen water can prevent filling if there is a frost. The water heater can be defrosted by switching on the heater for a short period (max. 2 minutes).

9.3.6 **Note:** If just the cold water system is being used, without the water heater, the heater tank is also filled up with water. In order to avoid damage through frost, the water contents must be drained by actuating the safety/drain valve and also when the heater has not been used. As an alternative, a shut-off valve can be installed upstream of the cold and hot water connection (your Auto-Sleeper dealer will advise you regarding this).

9.4 Draining the Water Heater

9.4.1 Disconnect power for water pump by switching off the water pump switch.

9.4.2 Open hot water taps in the kitchen and the bathroom.

9.4.3 *Open safety/drain valve; with lever in vertical position, position (f).*

9.4.4 The water heater can now be drained directly to the outside via the safety/drain valve. Check that the water contents have been completed drained (approximately 10 litres).

9.5 Control Panel (Gas Operation)

a = Slide switch On/Off.
b = Rotary knob for water temperature (illuminated by green indicator lamp "Operation").
c = Red indicator lamp "Failure".

9.5.1 Gas Operating Instructions

Attention: Never operate the water heater without water in it.

If the wall cowl is positioned close to an opening window - in particular directly under it - it must remain closed when the water heater is in use.

9.5.2 Remove cowl cover.

9.5.3 Open gas cylinder and open isolation tap in the gas supply line.

9.5.4 Select required water temperature at rotary knob (b), which is infinitely variable from approximately 30° to 70°C.

9.5.5 Switch on water heater at the slide switch (a) on the control panel, the green indicator lamp "Operation" then lights up.

9.5.6 If there is air in the gas supply line, it may take up to a minute before the gas is available for combustion. If the appliance switches to "Failure" during this period, switch off the appliance - wait 2 minutes - and switch on again.

9.6 Switching Off (Gas Operation)

9.6.1 Switch off the water heater at the slide switch (a).

9.6.2 **Drain the water heater if there is a risk of frost.**

9.6.3 If the water heater is not to be used for a long periods, fit the cowl cover. Non-observance of this point can lead to the operation of the appliance being impaired through water, dirt or insects. Close the isolation tap in the gas supply line and turn off the gas cylinder.

No warranty claim will be met if this point is not observed. Always remove the cowl cover prior to operating the water heater.

9.7 **Red indicator lamp"Failure"**

9.7.1 The red indicator lamp (c) lights up if there is a failure.

9.7.2 The reason for such an indication is, for example, if no gas is available or if there is air in the gas supply system, triggering the excess temperature monitor. To unlock, switch off the appliance, wait 5 minutes, and switch on again.

9.7.3 In the event of faults, always contact Truma Service (they may be contacted through your local Auto-Sleeper dealer).

9.8 **Truma Control Panel (Electrical operation 230 V, 450 W)**

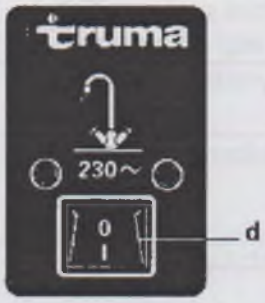

d = Switch On/Off

9.9 **Electrical Operating Instructions**

9.9.1 **Attention:** Never operate the water heater without water in it.

9.9.2 Switch the switch (d) on the Truma control panel to "On". The indicator lamp indicates that the electrical water heating is switched on.

9.9.3 **Note:** The water temperature is fixed at approx. 70°C. For a faster heating up period the appliance can be simultaneously operated on both gas and electrical power.

9.9.4 **Maintenance**
Use wine vinegar for de-scaling the water heater; this should be introduced into the appliance via the water supply. Allow the product to react and then thoroughly flush out the appliance with plenty of fresh water. To sterilise the water we recommend "Certisil-Argento". Your local Auto-Sleeper dealer will obtain this on your behalf. Other products, particularly those containing chlorine are unsuitable.

9.9.5 **Note:** The water tank in the Truma-Ultrastore is of high quality stainless steel. The plastic elbow water connections and the safety/drain valve fulfil the EC guidelines for food quality in plastic parts (90/128/EEC).

9.9.6 In order to avoid the colonization of micro organisms, Truma recommend heating up the tank to 70°C at regular intervals and not using the water as drinking water.

9.10 Fault Tracing Guide

9.10.1 Gas Operation

Primary Symptom	Cause	Cure
When switching on from cold, no indicator lights come on	No power at wallswitch. Reversed power supply	Check wire connections. Check polarity of connection from motorhome wiring to wallswitch. Correct polarity and replace fuse
When switching on from cold, green light comes on, burner fails to light	Power not reaching heater	Check wiring from wallswitch to heater for disconnection
When switching on from cold, green and yellow lights come on	Voltage below 10.5v	Charge battery
When switching on, green and red lights come on	No gas or air in supply line	Purge by switching on several times or change gas bottle
Yellow light comes on when pump is operated	Voltage near 10.5v	Charge battery
Red light comes on and after 30-40 mins, water and steam.	Fusible plug blown	Replace module and fusible plug
Occasional operation of red light (lock-out)	Incorrect gas pressure	Check regulator or change gas bottle
Water coming from cowl	Pressure relief valve operating on temperature rise	Check pump pressure for high value
Isolating switch indicator light not alight	No power	Check fuse or RCD for open circuit

9.10.2 Mains Electrical Operation

Symptom	Cause	Cure
Mains immersion heater does not operate	No power Re-set trip operated	Check supply fuse or RCD No water, fill and re-set (if operates again seek service attention)

10 HEKI 2 ROOF VENTILATOR

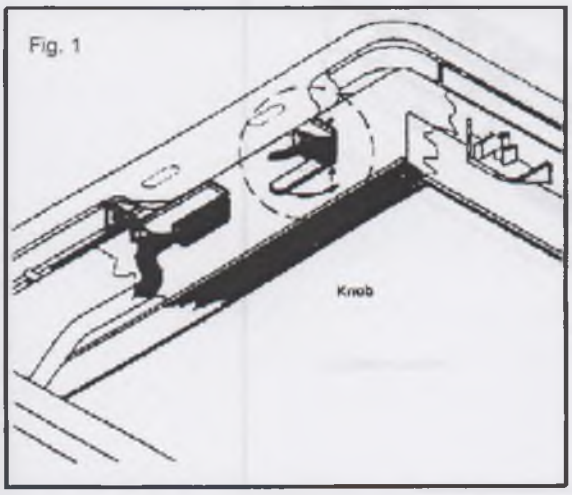

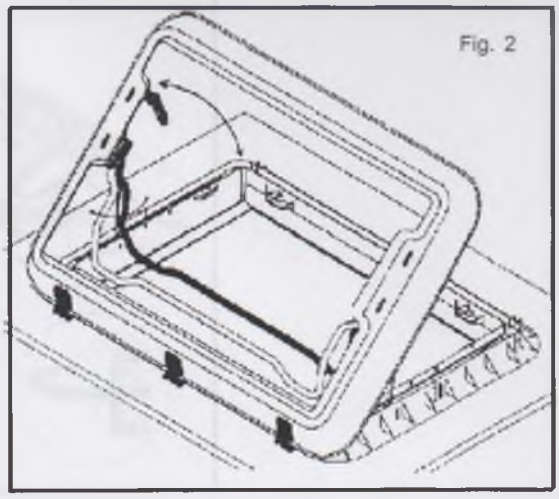

10.1 To Open in the Tilted Position (see figures 1 and 2 above)

10.1.1 Press the knob in the toggle catches on either side of the glass and turn through approximately 90°.

10.1.2 Grasp the metal bar in the middle, snap it out of its holder, swivel down and push the glass dome upwards. (The dome is supported by the two gas struts after approximately 150mm.)

10.1.3 Swivel the metal bar towards the glass dome and snap it back into its holder.

10.1.4 To close the glass dome, proceed with steps (13.1.1 - 13.1.3) in reverse order.

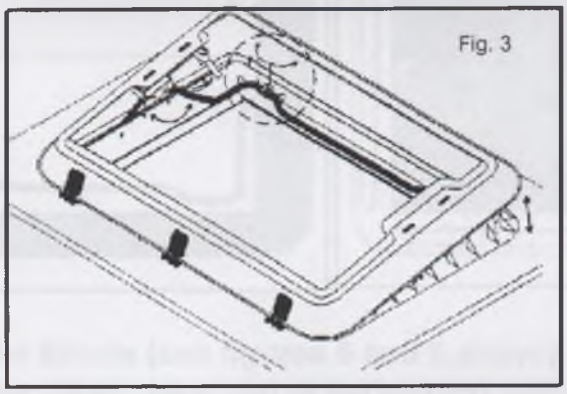

10.2 To Open in the Intermediate Position (see figure 3 above)

10.2.1 Open the toggle catches on either side of the glass.

10.2.2 Grasp the metal bar in the middle, snap it out of its holder, swivel down and push the glass dome upwards. (The dome is opened automatically after approximately 150mm by the two gas springs.)

10.2.3 Open both fasteners and swivel the metal bar toward the intermediate position (fastener fig.), and pull the glass dome down until the metal bar is stopped by the fasteners.

10.2.4 Clip in the metal bar with both fasteners.

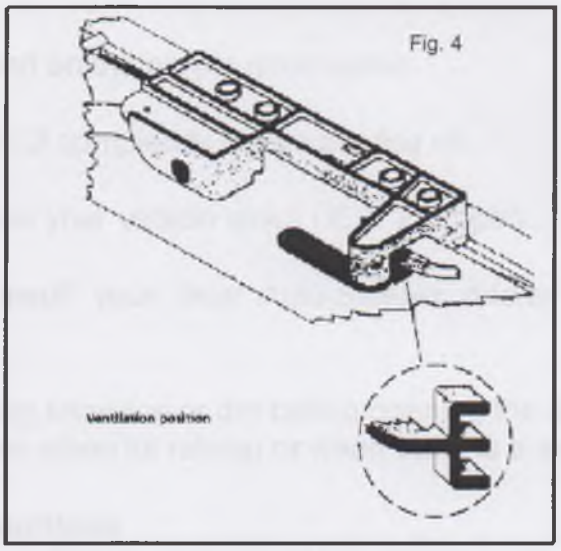

10.3 To Open in the Ventilation Position (see figure 4 above)

10.3.1 Open the toggle catches on either side of the glass.

10.3.2 Using both hands on the two toggle catches, press the glass dome up about 2cm and fasten the toggle catches in the corresponding setting.

10.3.3 To close the HEKI 2, proceed with steps (13.3.1 - 13.3.2) in reverse order.

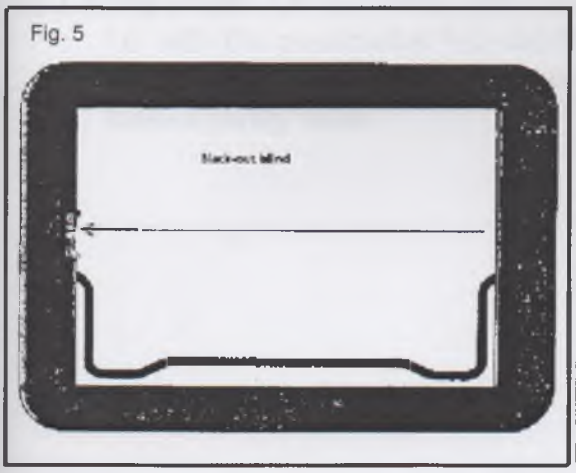

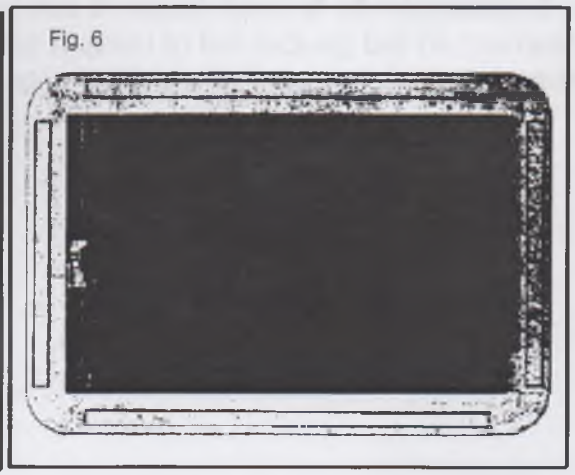

10.5 Closing the Blinds (see figures 5 and 6 above)

10.5.1 To close the blinds, take hold of the end rod (without rocker) in the recessed grip and engage in the opposite end rod (with rocker).

10.6 Caution!!

10.6.1 In extremely bright sunshine, the black-out blind must only be closed two-thirds, and the pane must be set in the "continuous airing" position.

10.6.2 Selection the required position (black-out/flyscreen) by moving both joined end rods together.

10.7 Opening the blinds

10.7.1 Move blind (end rod with rocker) right to the outside (see diagram).

10.7.2 Hold the recessed grip with one hand; with the other hand, press the rocker and move the blind back (do not let it recoil).

10.8 Notes

10.8.1 Do not stand on the acrylic glass dome.

10.8.2 Close HEKI 2 completely before moving off.

10.8.3 Do not leave your vehicle when HEKI 2 is open.

10.8.4 Please consult your local Auto-Sleeper dealer if you have any problems or defects.

10.8.5 Remove any snow/ice or dirt before opening the dome.

10.8.6 Do not open when its raining or when there is a strong wind.

10.7 Care Instructions

10.7.1 Clean the acrylic glass pane with soap suds and plenty of water, or use the Seitz special cleaner.

10.7.2 Use talcum to care for the rubber seals.

10.7.3 Only use water and mild soap suds to clean the blinds.

10.7.4 The guarantee becomes null and void if these instructions are not followed.

10.7.5 **Important** Do not travel with the Heki 2 locked down in its intermediate position i.e. with the overcentre flap catches applied to the locking bar on the rear face of the unit. It is possible that these clips will work loose and the roof ventilator inadvertently raise.

ELECTRICAL SYSTEM

1 CONTROL PANEL

The control panel is located on the forward facing fridge side panel.

It incorporates a 12v master switch, LED Battery status indicator, LED water level indicator, lighting master switch, pump master switch, 4 miniature circuit breakers, pump running indicator and a waste tank full indicator.

1.1 MASTER SWITCH

1.1.1 This will isolate the habitation 12v DC systems except for the refrigerator 12v which operates via the vehicle alternator.

1.2 BATTERY STATUS INDICATOR

1.2.1 A 5 segment display shows the voltage of the habitation battery. The display is marked from LO, 10, 11, 12, 12, HI to obtain a reading press the switch on the left of the display marked test.

1.3 WATER LEVEL INDICATOR

1.3.1 A 5 segment display shows the amount of water held in the fresh water tank. The display is marked in graduations from Empty (E) - ¼, ½, ¾, Full (F). To obtain a reading, press the switch on the right of the display marked test. A reading can only be obtained if the pump switch is ON.

Note: The lighting and pump switch also incorporate a trip.

1.4 MINIATURE CIRCUIT BREAKERS

1.4.1 Four miniature circuit breakers are provided, marked 1-4. These act as circuit switches, and protection devices. The circuits they control are:

1 - water heater control unit, cooker ignition
2 - Spare - omnivent (optional)
3 - 12v DC sockets
4 - Fanmaster control, O/S reading lights

Should a fault occur the reset circuit breaker trip will 'pop out". To reset simply press the reset trip. Should it continue to trip, the fault must be investigated and rectified. The circuit breaker switches can be used to isolate the individual circuits described above.

1.4.2 Lighting Master Switch

This switch is used to control the 12v caravan lighting system.

Note: This switch does not control the offside reading lights.

1.4.3 Water Pump Master Switch

To operate the water pump press switch to on position. When the pump is running the indicator light (pump running) will illuminate.

The pump switch may be left in the on position as the pump will only operate when a tap is opened, however, it is advisable to switch the pump off during periods of prolonged none use.

1.4.4 Waste Tank Full Indicator
This will illuminate when the waste water tank has reached its full capacity level.

1.5 HABITATION BATTERY/FUSES

1.5.1 The main habitation battery is located in the forward facing rear seat.

1.5.2 The battery is of the 80AH leisure type and requires periodic maintenance.

1.6 FUSES

1.6.1 The split charge relay system fuse, 70A, is located in the engine compartment adjacent to the vehicle battery.

1.6.2 The refrigerator 12v dc fuse, 20A, is located adjacent to the habitation battery.

2. 240 VOLT AC SYSTEM
RESIDUAL CURRENT DEVICE

2.1 This unit is designed to give both overload and earth leakage protection for the electrical supply in your motorhome. This unit consists of three MCB's (Minature Circuit Breakers) and is fitted in the small cupboard beneath the refrigerator.

2.2 The MCB's are better described as mechanical fuses, which in the event of an overload situation in the circuit which they protect will automatically switch to the OFF position. After elimination of the fault the MCB is re-set by switching back on again (against the spring pressure) in an upwards direction.

2.3 In normal operation these MCB's should be left in the ON position. The residual current device (RCD) is fitted to provide protection against earth faults and possible electric shock.

2.4 In the event of an earth fault causing a leak of current to earth, either directly or via the human body, the unit will immediately trip and switch OFF the supply.

2.5 Only after elimination of the fault will it be possible to re-set the RCD to the ON position and so restore the supply again. The ON position is upwards against the spring pressure.

2.6 Periodically it is necessary to test the RCD.

2.7 This is achieved by ensuring that it is in the switched ON position with an electricity supply connected. By pressing the TEST button marked 'T' the unit should immediately switch to the OFF position. Provided this happens all is correct and the switch should be returned to the ON position (upwards) to restore the supply back to normal.

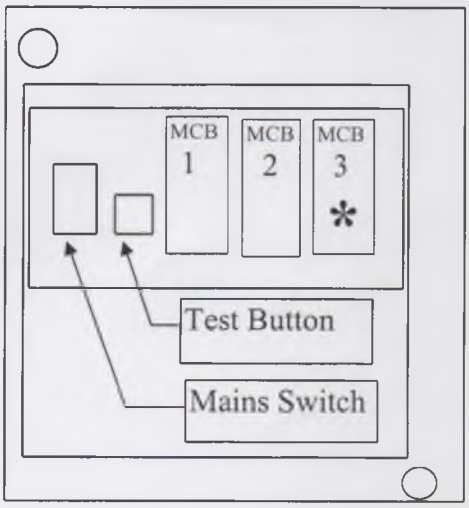

2.8 The RCD also acts as the main switch. And is used to switch off all 230 volt circuits in the vehicle.

2.9	MCB1 (10 amp)	-	230v Socket Outlet
	MCB2 (10 amp)	-	Truma E2400 Space Heater (Optional on Styrofoam models)
	MCB3 (6 amp)	-	Refrigerator (Mains Op), Battery Charger, Water Heater and 230v Light

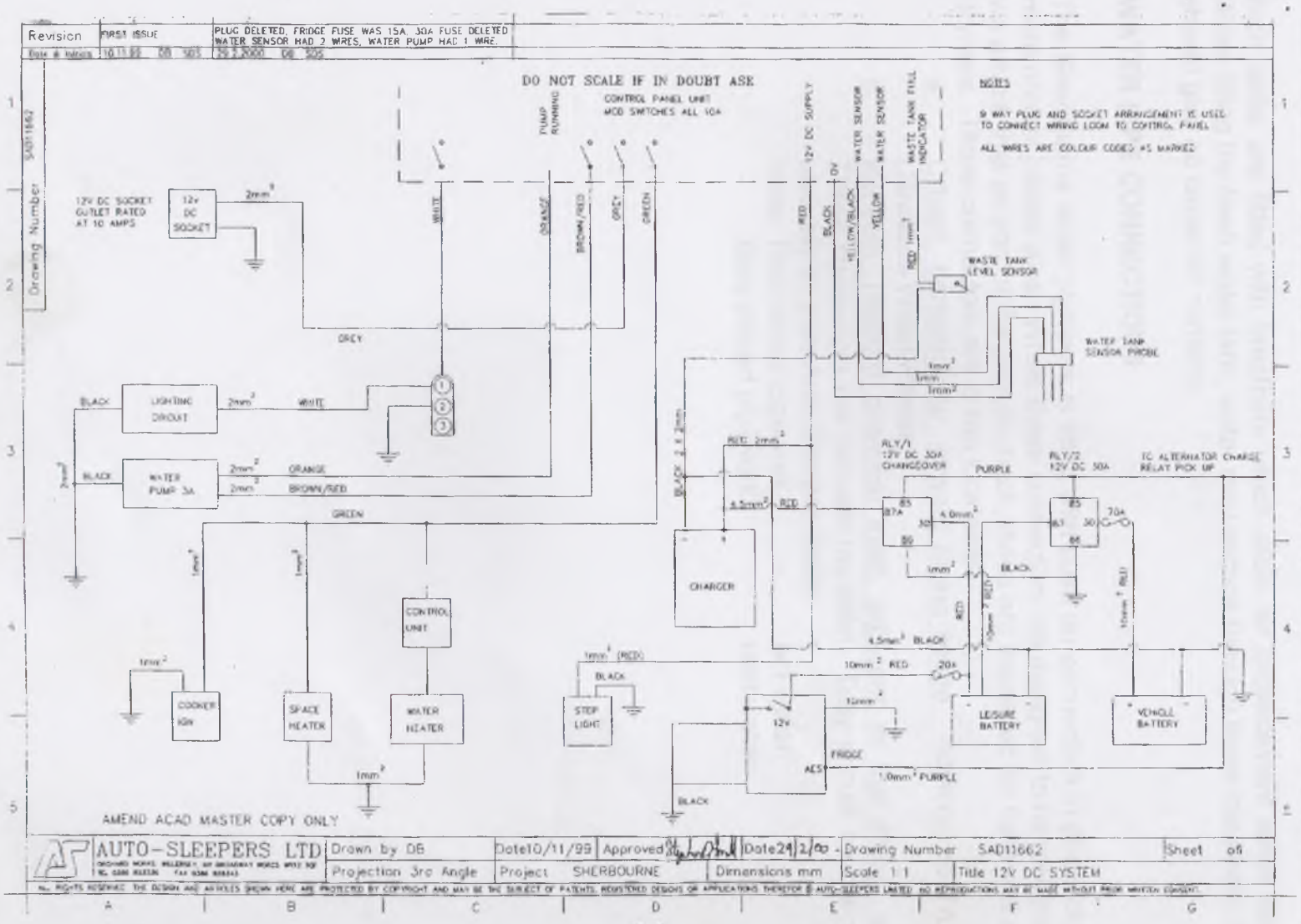

WATER SYSTEM

1 FRESH/WASTE TANKS

1.1 Both fresh and waste water tanks are fitted on the underside of the vehicle. For capacities of both see Section 11. The water system is externally filled using non-toxic semi-rigid hose. All pipework is manufactured to food grade material specification. The drain taps for both the fresh and waste water tank are positioned at the lower rear of each tank.

2 BREATHERS

2.1.1 Both tanks are fitted with breathers which allow air displacement when filling. When filling the fresh water tank, water may escape through these breathers; this should give no cause for concern.

3 WATER PIPE CONNECTIONS

3.1.1 The Sherbourne water pipework is fitted with push on connectors in place of the more normal jubilee clips. Whilst these connectors are designed to be leak proof, we advice that as part of the annual check, these are inspected for tightness and dryness. These connectors are in two locations:

a. Offside, beneath rear, forward facing settee. Adjacent to Truma Ultrastore Water Heater.

b. Beneath Thetford chemical toilet, adjacent to the offside wall. These connectors are beneath the toilet. They should be checked annually by your Auto-Sleeper dealer.

Note: Red striped pipework - hot water.
Blue striped pipework - cold water.

WATER SYSTEM

SCHEMATIC DIAGRAM FOR
IDENTIFICATION PURPOSES ONLY

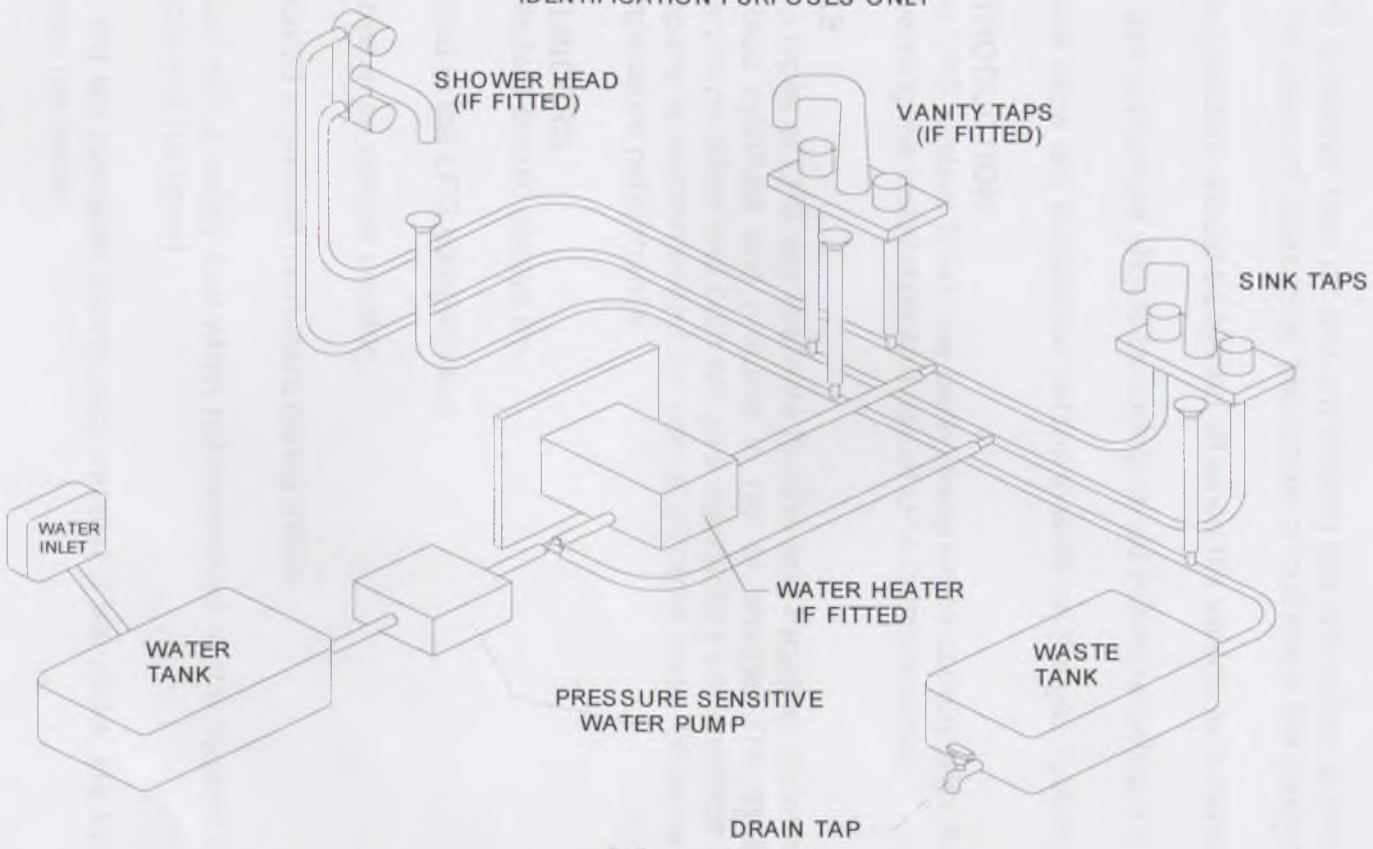

6.2

DRG No SAD11604	SCHEMATIC WATER SYSTEM LAYOUT	© AUTO-SLEEPERS LIMITED JAN 1999

GAS SYSTEM

1 SAFETY ADVICE

1.1 Liquified Petroleum Gas (LPG) has a stenching agent added to make it smell as an aid leak detection.

1.2 If at any time a gas leak is suspected turn off the cylinder at the valve and do not use the gas system until any leak has been eliminated.

1.3 If the cylinder is leaking it should be moved to an open area away from any drains or sources of ignition and the site warden or gas supplier informed.

1.4 LPG is heavier than air and any leaking gas will collect at low level in areas such as the bases of cupboards, bed boxes or hollows in the ground.

1.5 Gas cylinders should be turned off when the vehicle is in motion.

1.6 All gas appliances should be extinguished before refueling the vehicle.

1.7 Never allow any unqualified person to work on the gas system.

2 INTRODUCTION

2.1 The LPG system fitted has been designed to comply with the latest regulations governing the installation and use of LPG in motorhomes.

3 GAS

3.1 Two types of LPG are available Butane and Propane. Butane is usually supplied in blue cylinders and propane in red or orange. The system is designed to operate on either and both will give satisfactory performance during the summer. Propane is recommended for use at all other times because of it's superior low temperature performance.

4 CYLINDERS

4.1 Cylinders should always be:

4.1.1 Stored in the LPG compartment.

4.1.2 Stored in an upright position.

4.1.3 Secured to prevent movement during transit.

4.1.4 Fitted with a safety cap when not connected to the system (this applies to both empty and full ones)

4.2 Do not lag cylinders during cold weather it will make the systems performance worse, not better.

5 REGULATORS

5.1 Should be of a type suitable for the cylinder type being used and should provide an outlet pressure of 28 mbar for butane and 37 mbar for propane.

6 PIPEWORK

6.1 Two types of pipe are used on the system.

6.2 The first is the flexible tubing connecting the regulator to the low pressure nozzle and this must comply with the requirements of BS 3212/1. this must be replaced continually.

6.3 The second is the copper pipework connecting the appliances. All appliances are fitted with individual isolating valves.

7 APPLIANCES

7.1 Appliances should be used in line with the manufacturers instructions and serviced by qualified persons.

8 VENTILATION

8.1 There are various ventilators fitted to the vehicle and these all form part of the gas system design, they should not be blocked or obstructed in any way. Their function is to provide air for the occupants and appliances and to provide an escape route for gas in the event of a leak.

GAS SYSTEM

SCHEMATIC DIAGRAM FOR
IDENTIFICATION PURPOSES ONLY

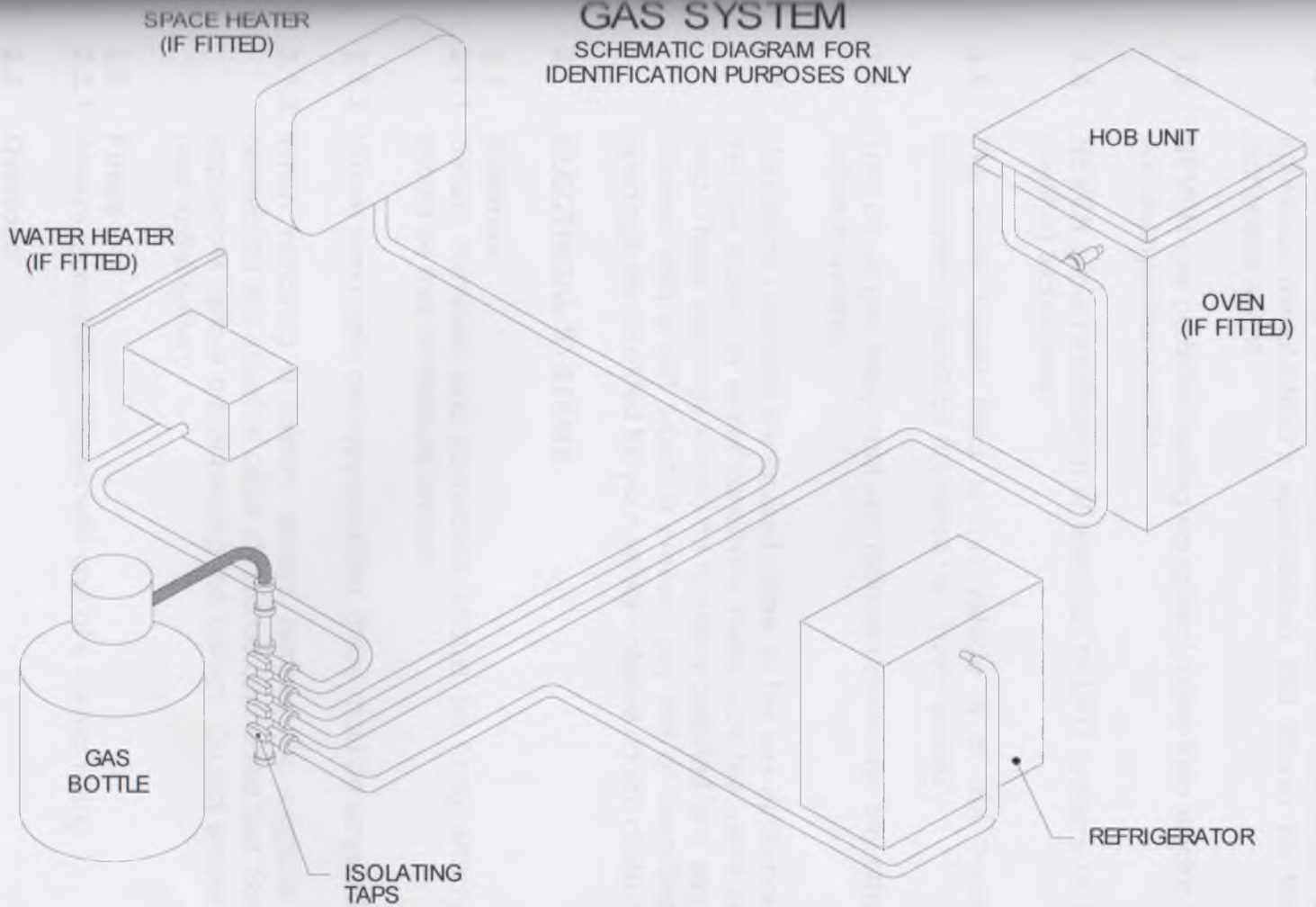

DRG No SAD11605	SCHEMATIC GAS SYSTEM LAYOUT	© AUTO-SLEEPERS LIMITED JAN 1999

7.3

SAFETY PRECAUTIONS

1 GENERAL

1.1 Before using your Auto-Sleeper, you should be fully conversant with the following safety precautions; if you are in any doubt as to the meaning of any of them you should contact your supplying Auto-Sleeper dealer. Please read the following carefully.

1.2 In the interests of safety, replacement parts for appliances should conform to the appliance manufacturer's specification and should be fitted by them or their authorised agent.

1.3 **NEVER** use portable heating equipment, other than electric heaters, as it is a fire and asphyxiation hazard.

1.4 **NEVER** allow modification of electrical or LPG systems or appliances except by qualified technicians.

1.5 The water heater fitted to this vehicle is of the "room sealed" type, any replacement should be the same i.e., "room sealed".

1.6 Turn off all gas equipment and cylinders/tanks and any other heating appliances before travelling.

1.7 Ventilation openings are located below all the gas appliances, and in the base of the gas locker. In winter conditions make sure the vents are clear of snow and mud. These openings should be regularly checked and any mesh covering them cleaned with a stiff brush to prevent any risk of them becoming blocked. The openings are provided for your safety - please do not obstruct them.

2 ELECTRICAL SYSTEMS

2.1 Batteries

2.1.1 Battery terminals and connectors should be firmly attached. Battery surfaces should be free of moisture and dirt.

2.1.2 Where removable cell tops are fitted, these must be screwed firmly home.

2.1.3 When removing a battery always remove the negative cable first. On re-connection the negative cable should be connected last. Switch off all lamps and appliances before disconnecting the battery. Do not smoke while working on or near to the battery.

2.2 Fuses

2.2.1 Always replace blown fuses with one of a correct rating.

2.3 Overload

2.3.1 Never overload any electrical circuit, especially the 12 volt socket outlet. The rating of appliances should be checked before connection.

2.4 Shower Compartment Light

2.4.1 Ensure that water does not ingress into the light unit.

2.5 Charger Unit

2.5.1 Keep the charger unit well ventilated and never allow material or bags to be in contact with the unit casing which gets hot when the unit is operating.

2.6 230 Volt Mains Operation

2.6.1 Before connecting to the supply, ensure that the contacts in both the plug and the socket are clean and dry and that the hook-up plug is firmly located and locked into the socket. The RCD must be easily accessible at all times.

2.7 Wiring Diagram

2.7.1 Wiring diagrams are to be found in the rear of this instruction booklet. If in doubt refer to this diagram and if necessary contact your local Auto-Sleeper dealer who will answer any of your queries.

2.8 (Base Vehicles Fitted With 12 Volt Electric Clocks and Alarm Systems)

2.8.1 In the event of the vehicle remaining unused for a long period, we recommend that the fuse through which the vehicle's electric clock is wired is removed.

2.8.2 Similarly, consideration should be given to wiring the alarm system through the leisure battery so that, in the event of the battery becoming fully discharged, the vehicle will still start, allowing the leisure battery to be charged.

3 GAS APPLIANCES AND FITTINGS

3.1 Operating Instructions

2.1.1 Please read the instructions and labels provided with your appliances carefully and keep them handy for future reference. Make sure you have means of lighting the gas before turning on the supply.

3.1.2 If there is anything that you are not quite sure about - ask your Auto-Sleeper dealer for advice.

3.2 Personnel

3.2.1 Ensure that you know how to operate the equipment - and never allow anyone other than a competent person to connect or disconnect appliances, regulators or cylinders.

3.3 Cylinders

2.3.1 Cylinders must be sited away from any heat source, in a well ventilated place and must stand in a stable upright position.

3.4 Regulators

3.4.1 It is important to ensure that the correct type of gas regulator is fitted. Your Auto-Sleeper dealer will offer any advice you may need.

3.4.2 When using Propane cylinders or Butane cylinders with screwed connectors always, before connecting a regulator to a cylinder, ensure that the mating parts are clean, free from dirt and undamaged, and, in the case of Butane regulators, check that the washer is in place on the spigot of the connector and is in good condition. The connecting nut of the regulator must be spanner tightened to the cylinder valve. (The thread is left-handed.)

3.4.3 For Butane cylinders with 'switch-on' or 'clip-on' connectors consult your dealer on the type of adapter or regulator you require and fit in accordance with the manufacturer's instructions.

3.5 Screwed Cylinder Connections

3.5.1 All screwed connections should be firmly tightened with a spanner. All nuts with notches on the hexagon have a left-handed thread.

3.6 Awnings

3.6.1 Awnings should be fitted so that any flue discharging into them does not constitute a hazard.

3.7 Leaks

3.7.1 After connecting appliances/regulators, etc., check that there is no leak of gas before using.

3.7.2 Propane and Butane have a distinctive smell and a leak can usually be detected immediately by this fact. If a leak is suspected, extinguish all naked lights and close the cylinder valve.

3.8 Maintenance

3.8.1 Like any other pieces of equipment, your appliances will need regular servicing and cleaning as directed in the manufacturer's handbooks.

3.9 Fire

3.9.1 In case of fire, try to turn off the cylinder valve, remove the cylinder from the fire and extinguish the fire with a dry compound extinguisher. If this is too dangerous move all people from the area and call the fire brigade.

4 LPG SAFETY IN CARAVANS (EXTRACT FROM BS 5482 PART 2 1977) - The safe use of LPG in Caravans and non-permanent dwellings.

4.1 General

4.1.1 Propane and Butane are stored in cylinders as liquids under pressure. When the pressure is released, i.e., when the cylinder valve is opened, the liquid boils and gas is evolved. Both gases are heavier than air and any leaking gas will tend to collect at a low level.

4.1.2 The gas has a strong and unpleasant smell which enables leaks to be easily detected. The gas is highly flammable and a small quantity of gas in air can form an explosive mixture. Cylinders must be used and stored in a vertical position with the valve uppermost.

4.2 Safe Usage

4.2.1 To avoid accidents, the following fundamental advice should be carefully read before using gas appliances or changing gas cylinders.

i. Always read and follow the use and maintenance instructions provided by the manufacturers of gas equipment. Should any soot accumulate on pans, fire radiants, etc., or any smell be produced, consult a competent installer on the correct maintenance and adjustment of burners.

ii.

ii. Never check for gas leaks with a naked flame.

iii. Always turn off the gas cylinder valve(s) or inlet to the motorhome or other dwelling when gas appliances are not in use.

iv. Never use gas appliances without adequate ventilation. All gas appliances require a plentiful supply of fresh air for correct operation. Fixed ventilators or air inlets should not be stopped up. Where practicable, turn off all appliances before retiring to bed, preferably at the cylinder or inlet to the motorhome or other dwelling.

v. Unless the appliance incorporates automatic ignition, when lighting an appliance always make sure you apply a lighted match or taper to the burner before turning on the gas.

vi. If any appliance is disconnected for repair, maintenance, etc., ensure that the gas line is capped off.

vii. If taps are stiff to operate or appear to be a source of leakage, call in a competent installer to rectify. LPG taps require a special grease.

viii. Always seek advice when in doubt.

4.3 Routine Checking

4.3.1 It is essential to check the installation as follows:

i. Flexible hoses and tubing should be regularly inspected and replaced with an approved type when signs of cracking or other deterioration appears in any case not later than the date of expiry on the hose. After replacement ensure that the ends are well secured and leak tight.

ii. Check the complete gas installation, for soundness at least once per annum, and as necessary according to usage.

iii. All flue installations should be inspected, at least once a year, throughout their length for integrity of attachment, both the appliance and cowl, and for perforation due to damage or corrosion. Flues should be replaced if any sign of damage or perforation is found.
It should be ensured that the replacement is of an approved type conforming to the recommendations of BS 5440: Part 1. Flexible flue pipes should be manufactured of material not less than 0.1 mm thick and should be of one of the following grades of stainless steel as specified in BS 1449; Part 2.

316S11	316S33	320S31
316S13	317S12	320S33
316S31	317S16	

4.4 Changing Gas Cylinders

4.4.1 The following procedure should be adopted.

i. Extinguish any fire, flame or source of ignition (including cigarettes, pipes and pilot lights) before changing gas cylinders.

ii. Wherever possible change gas cylinders in the open air.

iii. Ensure that the gas cylinder valve(s) is/are closed before disconnecting any empty cylinder or before removing the plastic cap or plug on the outlet connection of the replacement cylinder. (Note left-handed thread).

iv Make firm gas-tight joints. Any leaking vapour will smell. If a leak is suspected after changing gas the cylinders and opening the valves, test by brushing with soapy water around the joints. Bubbles will form if vapour is leaking. **Never use a naked flame.**

v. Ensure that the replacement gas cylinder is the correct one for the installation.

vi. Gas cylinder valves are of various designs depending on the type of cylinder and the use for which it is intended and it is essential that the correct pressure regulator with the correct pressure setting and capacity for the installation is used in accordance with the manufacturer's instructions.

In the case of a connection on a pressure regulator or gas appliance which relies upon a sealing washer(s) to maintain a gas-tight joint, it is essential to check that the washer is present, is sound and is correctly positioned prior to making the connection.

Where the connection relies on a metal to metal seating or bull nose connection to obtain a gas-tight joint, it is essential that the mating surfaces are clean and undamaged. In no case should a damaged valve or connection be used.

vii. Where connections are designed to be tightened with a spanner it is essential that a spanner of the correct size is used and that the union is firmly tightened; hand tightness is not sufficient.

When self-sealing valves are incorporated in a gas cylinder, connections should be made in accordance with the manufacturers instructions and tools should not be used.

4.5 Leaks

4.5.1 Action to be taken in the event of a suspected leak.

i. If a gas leak is suspected, close the gas cylinder valve or other valve at the inlet to the premises. Do not operate electrical switches. Open all doors and windows to disperse any gas escape.

ii. The strong unpleasant smell of LPG will enable the general area of the leak to be detected. Check that gas is not escaping from an unlit appliance. In the case of a leak, close cylinder valve(s) and call a competent installer to rectify the fault.

iii. If a leaking gas cylinder cannot be stopped, remove the cylinder to a safe place in the open air in an upright position away from drains and any source of ignition.

4.6 Fire

4.6.1 Precautions and actions to be taken:

i. A fire extinguisher of adequate size and preferably of the dry powder type should be available.

ii. The initial use of dry powder extinguishers is recommended only if it is likely that the leakage can be stopped by closing the cylinder valve or that the cylinder can be speedily removed.

iii. Cool with water all gas cylinders which cannot be removed.

iv. As soon as possible remove cylinders adjacent to the fire to a safe place in order to gain access to the seat of the fire.

5 VENTILATION

5.1 General

5.1.1 Fixed ventilation is a statutory requirements in all motorhomes. These ventilation apertures are positioned at both high and low level and for your safety should not be obstructed, even partially.

5.2 Low Level Ventilation

5.2.1 Under each appliance is a fixed ventilation aperture, of a size commensurate with the rating of the appliance itself. It is either gauze covered or incorporates a fixed plastic vent. Fixed lower ventilation is shown on the drawing on page 8.9. This should be checked regularly to see that it has not become blocked.

5.3 High Level Ventilation

5.3.1 High level ventilation is provided by the roof vents. The ventilation provided has been carefully calculated and relates to the rating of the appliances in the vehicle. Roof vents must not be covered with anything that may limit or affect the ventilation they provide

5.4 Maintenance

5.4.1 Under no circumstances should any fixed ventilation aperture be blocked, covered, either partially or fully, or be modified in any manner whatsoever. They should be checked at least annually for damage or blockage. Screens and/or grilles should be kept clean and free from dust. See Page 8.9 for diagram of upper/lower ventilation.

6 SAFETY MATTERS - GENERAL

6.1 Below are some useful **DO'S** and **DONT'S** which should be borne in mind at all times when using your Auto-Sleeper.

6.1.1 DO

i. Close all roof ventilators when the vehicle is in motion.
ii. Drain the waste tank before driving away from a site, or as soon as practicable to avoid carrying unnecessary weight, and to prevent backflow in the shower tray.
iii. Switch off all gas appliances and turn off the gas at the cylinder's valve when the vehicle is in motion.

6.1.2 DO NOT

i. Occupy the roof bed whilst the vehicle is in motion.
ii. Store heavy items in any overhead locker or in any storage area from which they could come free and cause injury to the occupants of the vehicle.
iii. Use the rear corner steadies (if fitted) to jack up the vehicle when carrying out maintenance, when changing a vehicle tyre, etc.
iv. Exceed the weight limitations of the area encompassed by the roof rack (if fitted).
v. Store any items outside the area encompassing the roof rack.
vi. Use the cooker to heat the interior of the vehicle.
vii. Store aerosols in any compartments adjacent to the heater or any source of heat.
viii. Operate any gas appliance while the vehicle is being refuelled or in a confined space such as a garage.
vix. Use the heater if the flue has been damaged.
x. Operate the water pump when the fresh water tank is empty; this may seize the water pump bearings due to overheating.
xi. Block the slots that surround the roof ventilator since they contribute to the fixed ventilation of the vehicle.
xii. Use an adjustable regulator on the gas cylinder.

7 WARNINGS

7.1 Throughout your Auto-Sleeper will be found a number of Warning Notices.

7.2 You must adhere to the advice given in these Notices - your safety depends upon them. Replacements are available from your Auto-Sleeper dealer.

8 AIR BAGS

8.1 Do not fit rear facing children's seats to front facing seats protected by air bags. It is recommended that small children do not sit in the front passenger seat whilst the vehicle is in motion. Follow the advice given in your base vehicle instruction book.

9 FIRE - SAFETY ADVICE TO USERS

9.1 Ventilation

9.1.1 Do not obstruct the permanent ventilation openings which are fitted; your safety depends on them.

9.2 In Case of Fire

9.2.1 Get everyone out.

9.2.2 Turn off outside gas valve and/or liquid fuel valve (if fitted).

9.2.3 Disconnect the main electricity supply.

9.2.4 Raise the alarm and call the Fire Brigade.

9.2.5 Attack the fire if safe to do so.

9.3 Fire Precautions

9.3.1	Children.	Do not leave children alone.
9.3.2	Means of Escape.	Make sure you know the location and operation of the emergency exits. Keep all escape routes clear.
9.3.3	Combustible Materials.	Keep them clear of all heating and cooking appliances.
9.3.4	Fire Fighting.	Provide one dry powder fire extinguisher of an approved type or complying with IS0 7165 of at least 1 kg capacity by the main exit door, and a fire blanket next to the cooker. Familiarise yourself with the instructions on your fire extinguisher and the local fire precaution arrangements.

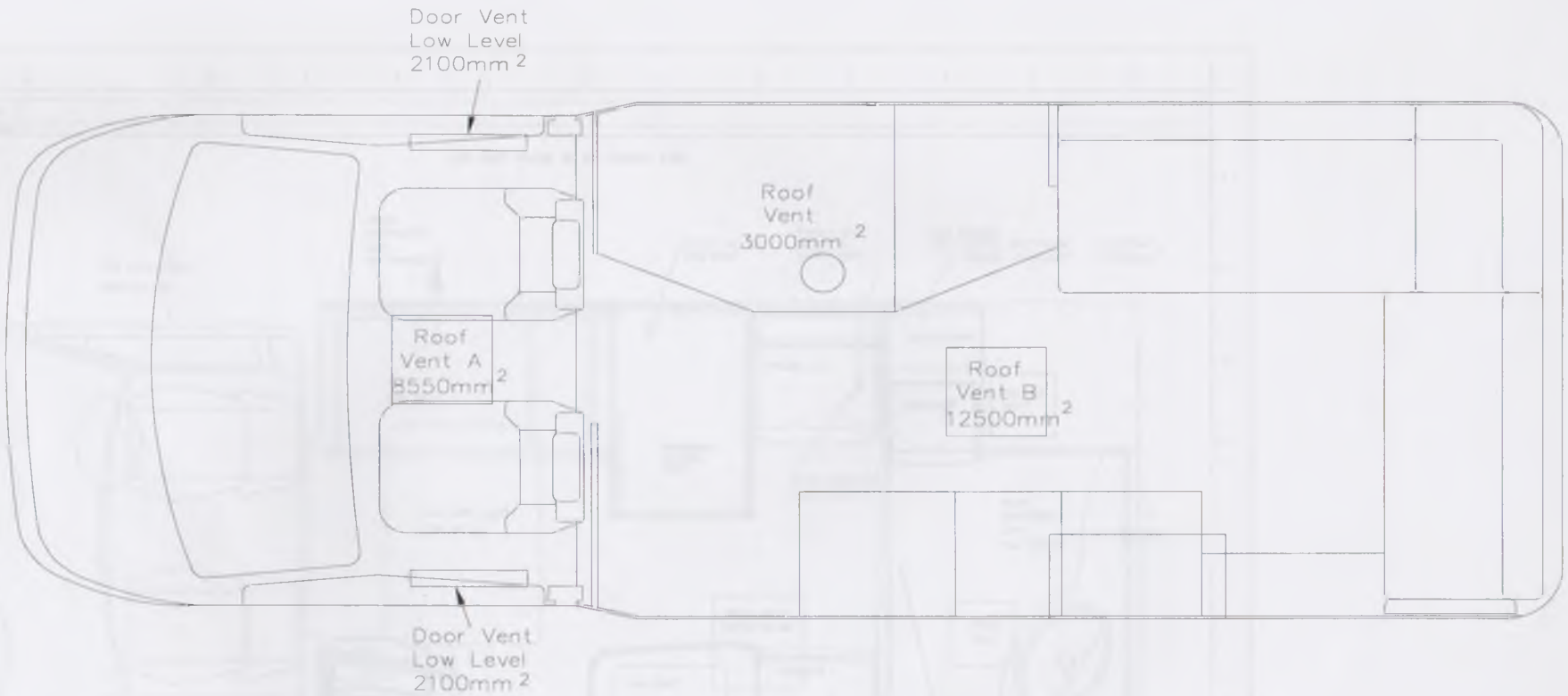

DRG No SAD11551	Peugeot Ravenna High/Low Ventilation	© AUTO-SLEEPERS LIMITED July 1998

Page 8.9

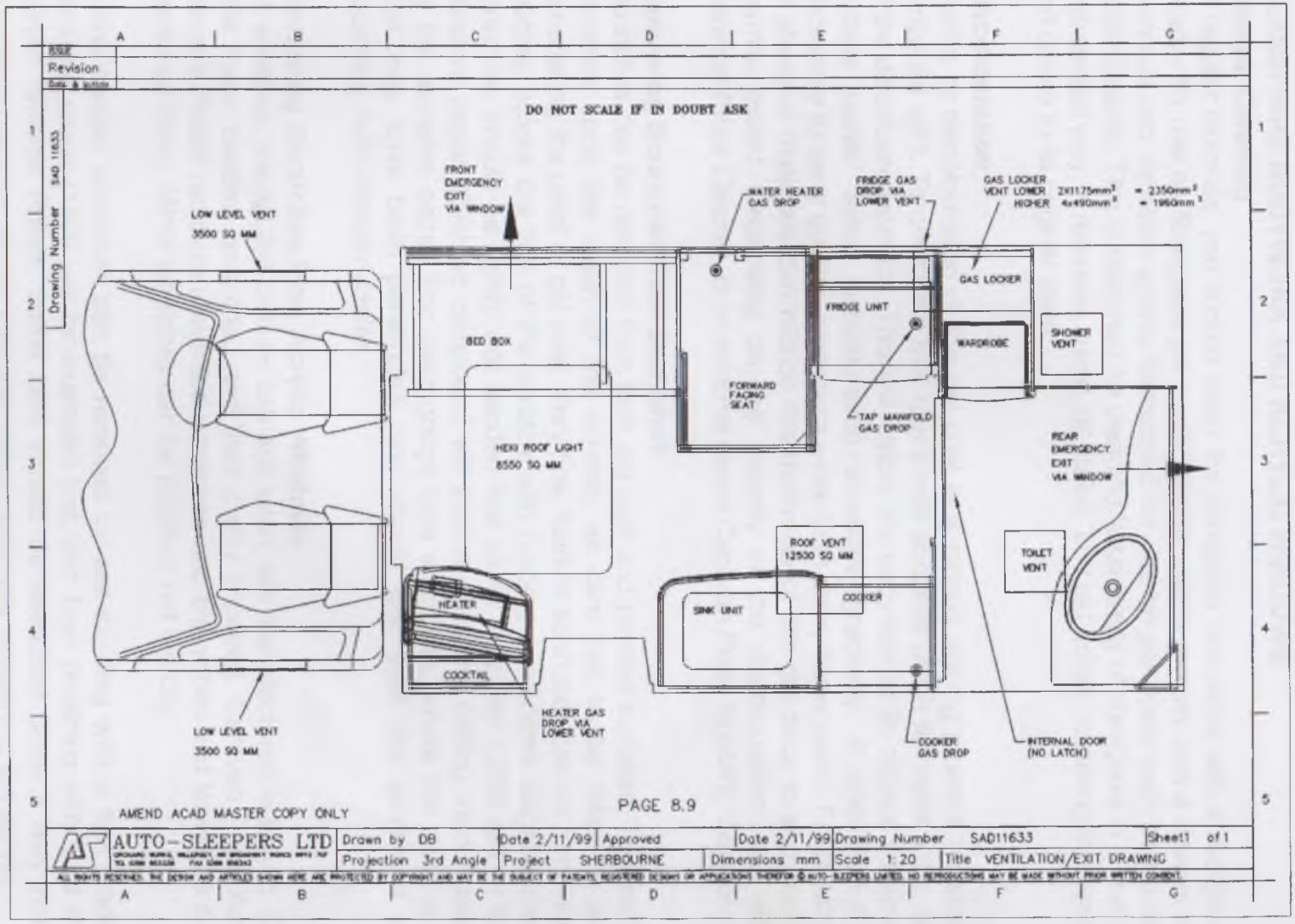

MAINTENANCE AND SERVICING

1 GENERAL

1.1 In order to keep your Auto-Sleeper in first class condition, periodic maintenance will be required to both the bodywork, windows, upholstery and other parts of the conversion. This maintenance should be carried out as detailed below.

1.2 Servicing

1.2.1 Servicing of the conversion is the responsibility is your local franchised Auto-Sleeper dealer to whom all queries should be referred. Servicing of the base vehicle should be carried out by your local base vehicle commercial dealer.

2 GLASSFIBRE BODYWORK AND ACRYLIC WINDOWS

2.1 General Cleaning

2.1.1 At regular intervals, you should wash the fibreglass bodywork with a recognised cleaner for use on fibreglass gel coats. Should marks remain, use a cleaner with chemical and abrasion agents formulated for use on gel coats such as Caravan Pride Cleaner. This is designed for cleaning large areas of fibreglass in a fast and economical way. It removes grime, oil stains, and old polish, restoring the surface and colour to its original state.

2.2 Discolouration

2.2.1 Fading or discolouration of the gel coat is a natural ageing process caused by ultraviolet light. To overcome this, use a mild abrasive which removes a thin layer of the discoloured surface. This will restore the bodywork to its original colour and surface lustre. Since discolouration develops gradually, it should not be necessary to carry out this procedure more than every three years. Frequent use of abrasive materials can reduce the thickness of the gel coat, to a potentially harmful extent. Depending on the severity of the discolouration, use either Caravan Pride Cleaner, or in extreme cases Caravan Pride Rubbing Compound.

2.3 Removing Scratches from Bodywork

2.3.1 Scratches can be removed from both gel coat and painted surfaces. The method depends upon the depth of the scratch, as care has to be taken to avoid penetrating the paint or gel coat. Very fine, hairline scratches can be removed by rubbing across the line of the scratch with rubbing compound. Slightly deeper scratches should be lightly wet sanded first using very fine (1200 grit or finer) abrasive paper. Rubbing compound will then remove the flatting marks created by the abrasive paper. For deep gouge type scratches, where the paint or gel coat may have been penetrated, you should first seek the advice of your supplying Auto-Sleeper dealer.

2.4 Removing Scratches from Acrylic Windows

2.4.1 All windows, except the chassis cab and luton, are manufactured in acrylic. Over time these become scratched and their clarity impaired. Caravan Pride Acrylic Window Polish removes unwanted scratches and blemishes and leaving a clear, haze free finish. Minor scratches can be polished out directly.

Some deeper scratches can be removed by wet sanding with a fine grade of abrasive paper (1500 grit for example) first, and then polishing with Boat Pride Acrylic Window Polish. Some care should be exercised since it may not be possible to remove severe damage without seriously weakening the acrylic.

2.5 Recommended Materials

2.5.1 We would recommend Farecla Caravan Pride Materials for both fibreglass maintenance and for the removal of scratches from acrylic windows. These materials are readily available from approved Farecla outlets.

Cleaning Fibreglass Bodies & Roofs:	Farecla Caravan Pride Cleaner
Discolouration:	Farecla Caravan Pride Rubbing Compound
Removing Scratches from Bodywork:	Farecla Caravan Pride Rubbing Compound or Farecla Caravan Pride Acrylic Window Polish
Removing Scratches from Acrylic Windows:	Farecla Caravan Pride Acrylic Window Polish

In the event of Farecla products not being readily available, we suggest that you contact the manufacturers direct at the address below:

Farecla Products Limited
Broadmeads
Ware
Hertfordshire
SG12 9HF Tel: 01920 465041

Note: All Auto-Sleeper dealers have addresses and telephone numbers of Farecla retail outlets, by region. If in doubt ask your dealer for the address and telephone number of your local Farecla outlet.

3 UPHOLSTERY MAINTENANCE

3.1 Cleaning

3.1.1 Upholstery should be brushed or vacuumed regularly. Fabrics should be wiped every six to eight weeks with a lint free cloth and fabric cleaning fluid. Velour materials may be dry cleaned.

3.2 Fabric Care

3.2.1 Fabric snags caused by sharp objects such as toys, nails, etc., should be trimmed off immediately. Never attempt to pull them off since this could cause the snag to run.

3.2.2 Whenever possible, avoid exposing the upholstery to direct sunlight which might eventually cause the colour to fade.

3.2.3 Fabrics with a velour type pile finish will develop crush marks in use - this is unavoidable and does not affect the quality of the product in any way.

3.3 Stain Removal

3.3.1 A proprietary dry cleaning fluid will remove most household stains. However, stubborn stains, such as coffee, wine or ice-cream may need pre-treatment with a mild soap and distilled water.

3.3.2 Small marks in velour type fabrics can usually be removed by stroking along the pile using a small brush and warm water.

3.3.3 We strongly recommend that before commencing any treatment an inconspicuous piece of material is tested for colourfastness and shrinkage. If in doubt, please contact a professional dry cleaning company. Do not apply cleaning solvents to velour piping, otherwise the flock will be removed.

4 WORK SURFACES

4.1 Laminated work surfaces are fitted to the tops of all furniture units. Whilst these are hard wearing, hot pans should not be placed directly on these surfaces, since damage may result.

5 STAINLESS STEEL COMPONENTS

5.1 External

5.1.1 In the event of discolouration of the stainless steel roof rack and ladder, this should be removed with T-Cut or any other mild abrasive and the surface protected with WD40 or a similar product.

5.2 Internal

5.2.1 Do not clean stainless steel fittings i.e. splash plate and sinks with bleach since this reacts with the stainless steel and may lead to corrosion.

6 FURNITURE

6.1 Furniture should be cleaned with a proprietary furniture polish periodically. Any water marks that may occur on the hardwood edging of the furniture units should be removed by use of fine grade wire wool and furniture wax.

6.2 Heavy stains may need to be sanded out and the edging re-polished with a proprietary varnish (Ronseal etc.). The high gloss finish is achieved by using wire wool and wax.

7 GAS INSTALLATION

7.1 All gas vents and flue pipes should be periodically checked for damage and should be kept free from dirt.

7.1.1 Blocking of vents or flues is extremely hazardous and should be avoided at all times.

7.2 Gas Appliance Ignitors

7.2.1 It is advisable, periodically, to check visually the ignitors on hobs, grills and ovens are sparking correctly.

7.3 Annual Inspection

7.3.1 The gas installations should be inspected annually by qualified personnel. If in doubt contact your supplying Auto-Sleeper dealer. Modifications to the gas systems should not take place unless carried out by qualified technicians.

8 SEAT RESTRAINTS

8.1 Seat restraint mountings should be checked for tightness annually and re-tightened if necessary to a torque setting of 40 Newton Metres.

8.2 In the event of any impact of 25 mph or over in which seat belts have been worn, they must be replaced before the vehicle is used again.

9 WATER SYSTEM

9.1 Fresh Water Tank

9.1.1 At regular intervals, and at least every three months, the fresh water system should be flushed through with fresh water. Furthermore it is advisable that prior to using your Auto-Sleeper, the fresh water system is thoroughly flushed with fresh water.

9.2 Waste Water Tank

9.2.1 Since the waste water tank can hold foreign matter, it should be regularly flushed with fresh water. To prevent odours working back through the shower and sink outlets, flush the waste tank through with a small amount mild disinfectant.

9.2.2 Depending on the use of the waste tank, it is possible that this will collect solid waste matter which in some instances may build up and block the waste tank outlet tap. In this case it will be necessary to drop the tank for cleaning. Access is through a large diameter fitting in the tank top. Once removed this will allow the tank to be flushed out in an inverted position and all solids removed.

WINTERISATION

1. GENERAL

1.1.1 This section contains information on the winterisation of your Auto-Sleeper, particularly when you may wish to lay up your vehicle for the winter months.

1.2 WATER SYSTEM

1.2.1 The water system should be fully emptied and the drain taps on both the fresh water tank and waste water tank left in the open position. Likewise, all internal taps should be left open and the water pump run until the last traces of water have come out of the taps. Purely as a precaution, against very severe freezing conditions, the water filter that is attached to the water pump on the outlet side should be removed and cleared of all water. In doing so it will give you the opportunity of cleaning it, if necessary, ready for the coming season. Remove all sink plugs to allow the water system to breathe.

1.2.2 Flush fully the waste water tank to remove any excess debris and waste material. Flush through again with disinfectant as part of the final drain. Leave drain tap open.

1.3 UPHOLSTERY

1.3.1 We advise that any detachable upholstery is removed and taken indoors during prolonged winter storage, particularly detachable upper bed mattresses and scatter cushions.

1.4 CURTAINS/BLINDS

1.4.1 To prevent uneven bleaching, and possible excess sunlight onto the furniture and fabrics, we recommend that either the curtains or blinds are left drawn.

1.5 REFRIGERATOR

1.5.1 Leave the refrigerator door open, on its intermediate lock position; this will allow the refrigerator to breathe and prevent any unpleasant odors in the storage department.

1.6.2 If the refrigerator is not to be used for some time:

v. Set the switch (A) to "OFF" (See page 4.1 for diagram).
vi. Shut off any on-board valve in the gas line to the refrigerator.
vii. Empty the refrigerator. Defrost and clean it as described earlier. Leave the doors of the refrigerator and frozen food compartment ajar.

1.7 VENTILATION

1.7.1 There is fixed upper and lower ventilation in your Auto-Sleeper which is built-in in the interests of safety. There is therefore no need to leave any windows or roof ventilators ajar - indeed the roof ventilators have sufficient fixed ventilation to allow the interior or the vehicle to breathe satisfactorily.

1.8 EXTERIOR

1.8.1 Fit, where appropriate, the Electrolux winter covers to the fridge ventilators. Give your Auto-Sleeper a good wash and polish before laying up, and apply a small film of protective oil to the stainless steel roof rack, ladder and any other external polished metal components.

1.9 THETFORD CASSETTE TOILET

1.9.1 The Thetford Cassette C200-CW is easily winterised for storage.

1.9.2 Empty remaining fresh water into the bowl by activating the flush handle up and down.

1.9.3 Once pump has been cleared and water flow has stopped complete, release into waste tank. Remove waste tank and empty contents in normal way.

1.9.4 To evacuate any remaining water from the fresh water tank, place a container underneath the drain plug and remove drain plug.

1.9.5 When procedure has been completed replace drain plug and waste holding tank. Clean the seals and grease them after drying.

1.9.6 Leave the blade of the holding tank open. Do not replace cap on the pour-out spout, to ventilate the holding tank. (Also grease the seal of the pour-out spout cap.)

1.10 ELECTRICAL

1.10.1 Remove the battery, if appropriate, from the electric clock. If your Auto-Sleeper is fitted with a clock that operates from the main vehicle battery, we would advise that the appropriate fuse is removed.

TROUBLE SHOOTING

1 Shown below are a series of fault finding charts to which you should refer in the event of problems you may have regarding 230/12v, LPG and water. This should be used as a guide only, and in the case of an electrical fault, where a fuse has blown or an MCB tripped out, the fault must be located before replacing the fuse. If a fault is suspected with the LPG system, consult a CORGI registered technician.

1.1 If in doubt consult a qualified technician or your local Auto-Sleeper dealer.

1.2

12 VOLT

Symptom	Cause	Remedy
abitation 12v does not perate.	Main 70A fuse blown.	Check/Replace.
	Battery Discharged.	Recharge
	Switch on control panel in off position.	Switch to on.
	Vehicle ignition 'on'.	Switch 'off' ignition.
abitation battery not harging.	70A fuse blown.	Check/Replace.
	Relay fault.	Refer to dealer.
	Contacts dirty/loose on battery terminals.	Clean and check for tightness.
	Poor earthing.	Check earthing to chassis point.
attery does not hold its harge.	Failed battery.	Check cells with hydrometer change electrolyte if necessary.
	Current being drawn.	Check all appliances are off when not in use.
attery discharges over a hort time with appliances perating.	Poor battery cell condition.	Check cells with hydrometer.
	Failed battery.	Change battery.
	Battery not fully charged.	Fully recharge battery.
o power to one or more 2v appliances.	MCB on control panel blown.	Reset.
ights dull/only one tube uminating.	Low battery charge.	Check battery.
	Faulty light unit/tube.	Replace/Check.
ater pump not operating.	Switch on panel 'off'.	Switch it 'on'.
	Pressure switch on pump not operating.	Refer to dealer.
	MCB No 2 (10A) on panel blown.	Reset.
ater tank gauge showing se readings.	Calibration out.	Re-calibrate.
o power on 12v socket utlet.	MCB 4 on panel blown.	Reset.
	Appliance has caused fuse 4 to blow.	Check appliance rating. Max 10A.
	12v plug incorrectly connected/wired.	Check plug.
pace Heater not perating/cuts out.	Low battery charge.	Check battery.
	Unit fault.	Refer to dealer.

12 VOLT CONTINUED ..

Symptom	Cause	Remedy
Water Heater not operating/cuts out.	MCB 3 on control panel blown.	Reset.
	Lower battery charge.	Recharge battery.
	Unit fault.	Refer to dealer.
Cooker ignition not operating.	MCB 3 on control panel blown.	Reset.
	Spark unit fault.	Refer to dealer.
	Fault on cooker unit.	Refer to dealer.
Fridge gas ignition not operating.	MCB 3 on control panel blown.	Reset.
	Ignition control switch fault.	Refer to dealer.
Fridge ignition switch flashes but gas does not ignite.	Fault on fridge unit.	Refer to dealer.
Ignition can be heard to be sparking but no flashing on fridge switch.	Faulty fridge ignition switch.	Refer to dealer.
Fridge does not operate on 12v when engine is running.	20A fuse blown.	Check fuse.
	Fault on fridge relay.	Refer to dealer.
	Fault on fridge unit.	Refer to dealer.
Toilet pump/valve not operating.	Fuse 6 on control panel blown.	Check fuse.
	Fault on toilet unit.	Refer to dealer. Refer to instructions for toilet unit.

Note: All ignition systems on appliances are fused via Fuse No 3 (5A) on the control panel.

230 VOLT

Symptom	Cause	Remedy
230v system inoperative.	No site power.	Check site supply.
	RCD/MCB switches tripped out.	Reset circuit breakers.
RCD/MCB keeps tripping out.	Fault on 230v supply.	Check supply including polarity.
	Faulty appliance.	Turn off all appliances, reset circuit breakers, turn on appliances until fault occurs. Isolate faulty appliance.
	Overload on current consumption by appliance.	10A maximum available do not use appliance.
Water Heater does not operate on 230v.	No power.	Switch on MCB isolator switch/ check fuse.
Battery Charger does not operate.	Charger switched off.	Switch on.
Refrigerator does not operate on 230v.	Switch on refrigerator thermostat dial not 'on'.	Check position of thermostat dial.
	Element fault.	Refer to dealer.
Mains lighting not working.	Bulb/tube fault.	Replace bulb/tube.
Blown air not working.	No power.	Switch on isolator switch/MCB.

mptom	Cause	Remedy
pliance will not light.	No gas.	Change the cylinder.
		Check cylinder is turned on.
		Check isolation valve is open.
	Low battery (auto ignition).	Charge battery.
pliance lights but goes t immediately the FSD erride is released.	Flame supervision device (FSD) is not functioning correctly.	Refer to Dealer.
dour.	Gas leak.	Turn off the gas at the cylinder and do not use the gas system until the problem has been rectified.
		In the event of a leaking cylinder, if possible, position the cylinder in an open area away from any sources of ignition. Contact the site warden and/or the local gas supplier.
ellow flame.	Lack of primary air. Please note yellow tipping to the flame is normal.	Refer to Dealer.
range flame.	Particles of dust or dirt in the mixing tube being carried through the burner ports.	Reduce the amount of dust in the air.
	Burner ports partially blocked.	Refer to Dealer
loating flame.	Lack of secondary air.	Check all vents are clear (air inlet to vehicle).
	Blocked retention ports	Check retention ports are clear.
	If in an oven.	Check the flue way is clear.

WATER

Symptom	Cause	Remedy
Continuous running of water pump.	1. No water.	1. Fill tank.
	2. Major leak.	2. Switch off immediately and check system
Intermittent operation of water pump.	Minor leak in water system.	Check Jubilee clips for tightness.
Intermittent operation of water pump 20 second cycle approx).	Water pump pressure release valve reasserting itself.	No action - part of pump design.
Water pump does not operate.	Circuit Breaker tripped/ Fuse blown in the Control Panel.	Check and refer to dealer if necessary.
Water gauge does not show correct readings.	Calibration control incorrectly set.	Re-calibrate.
Water gauge does not operate.	Probe fault.	Refer to dealer (check probe connections).
No hot water (gas system).	Gas module not lighting.	Refer to dealer.
No hot water (gas system).	Ignitor not working.	Check 12v switched on.
Slow drainage from sink/shower tray.	Blocked breathers in waste tank.	Drop tank and clear breathers.
Tip-up handbasin slow to drain.	Blocked drain hole.	Remove basin and clear.
Unsatisfactory operation of water pump.	Filter blocked.	Clean filter.

TECHNICAL DATA

1 Below is technical data relating to your Auto-Sleeper. This section is laid out as follows:

BASE VEHICLE DATA
WEIGHTS, DIMENSIONS AND CAPACITIES
APPLIANCE TECHNICAL DATA

2 BASE VEHICLE DATA

2.1 For all matters relating to the base vehicle, and particularly tyre pressures, refer to the base vehicle instruction book or if in doubt consult your local base vehicle commercial dealer.

3 WEIGHTS, DIMENSIONS AND CAPACITIES

3.1 Before using your Auto-Sleeper you should be fully conversant with all matters relating to weights. The following definitions should be fully understood and then related to the tabulated base vehicle weight data.

3.2 Weights

3.2.1 Details of vehicle weights are found below, and are presented in the manner prescribed in the European Standard EN1646-2 for Payloads. All weights are in kilograms (kg).

3.2.2 **Note 1:** Please take care to ensure that you have allowed for the masses of all items you intend to carry in the motor caravan e.g. passengers, optional equipment, essential habitation equipment and personal effects such as clothing, food, pets, bicycles, sailboards, sports equipment, etc.

3.2.3 **Note 2:** Warning - Under no circumstances should the maximum technically permissible laden mass of this motor caravan, or its individual axles, be exceeded.

3.3 Definitions

Note that the paragraph numbers below, refering to definitions, are repeated in the weight data table in the appropriate section.

3.3.1 Maximum Technically Permissible Laden Mass (MTPLM).

The Maximum Technically Permissible Laden Mass is a figure given by the manufacturer of the base vehicle. It is the combined maximum permitted weight of the vehicle and all of its contents, both inside and out. The MTPLM is unaffected by the Auto-Sleeper conversion.

3.3.2 Mass in Running Order (MRO).

The Mass in Running Order is defined as the mass of the standard converted vehicle with bodywork including the following:

i.	- coolants (oil and water)	-	washer fluid
ii.	- 90% of automotive fuel	-	tools
iii.	- spare wheel	-	driver (@75 kg, 11st 12lb)
iv.	- crockery	-	fire extinguisher

All other optional equipment whether on the base vehicle or part of the conversion is excluded from the mass in running order.

3.4 Mass of the User Payload

3.4.1 The Mass of the User Payload is the difference between the MPTLM and the MRO. It is the motor caravans carrying capacity for everything placed in or on the vehicle, including the passengers. Please note that a driver (at 75kg, 11st 12lb) is included in the MRO. Everything listed in italics below must be subtracted from the payload.

3.4.2 Mass of the Conventional Load

The Conventional Load is the mass of the passengers carried and must be subtracted from the payload. The "EC standard person" weighs 75kg (11st 12lb). The user should adjust the figure according to the mass and number of passengers carried. Motorhome Manufacturers designate passenger seats as being suitable for travelling, and provide seat belts accordingly. Multiplying the weight of the passengers by the number of passengers gives the Conventional Load. Please note that a driver (at 75kg, 11st 12lb) is included in the MRO.

3.4.3 Essential Habitation Equipment

For the purpose of EN1646-2, the mass of the Essential Habitation Equipment includes the mass of the following:

i. - the LPG cylinders, full.
ii. - 90% of the fresh water.
iii. - the water system, full.
iv. - the waste water tank, empty.
v. - the toilet system flushing tank (if fitted) empty.
vi. - the toilet system holding tank (if fitted) empty.

All of these must be subtracted from the user payload.

Auto-Sleepers include the low voltage (230V) connection cable and the second battery in the mass in running order.

3.4.4 Options, Personal effects and Accessories

When options, personal effects and accessories are fitted or carried the mass must be subtracted from the user payload. All optional equipment whether on the base vehicle or part of the conversion is excluded from the mass in running order. Personal effects are any items of any description carried by the vehicle.

To determine accurately if a vehicle is exceeding one of its maximum technically permissible laden masses, the vehicle with all of its load (that is passengers, contents, luggage and external load) should be weighed on a weighbridge.

You may wish to allocate the user payload to suit your own use. For example, to increase the available payload, the water system may be emptied. If the vehicle is not being used for camping the gas bottles can be left at home to increase the mass available for other items.

3.5 Gross Train Mass (GTM)

3.5.1 If you are towing a trailer with your Auto-Sleeper, the Gross Train Mass is the maximum allowable weight of the towing vehicle, the trailer and the mass of every item carried. The GTM is given by the base vehicle manufacturer and is unaffected by the Auto-Sleeper conversion. Please check your driving licence to ensure you allowed to drive a vehicle combination at this weight.

3.6 Maximum Braked Trailer Mass (MBTM)

3.6.1 This is the maximum allowable weight of the trailer together with its load, provided the trailer has a braking system which complies with the local Construction and Use Regulations. The MBTM is given by the base vehicle manufacturer and is unaffected by the Auto-Sleeper conversion.

3.7 MPTLM of the Axles.

3.7.1 The individual axles also have MTPLM's. The sum of the two axle MTPLM's usually exceeds the overall vehicle MTPLM, but this does not mean you can load each axle to its maximum, because doing so would exceed the overall MTPLM of the whole vehicle.

4 WEIGHT AND DIMENSION DATA

4.1 In tabulated form below is the weight data of your Auto-Sleeper.

4.2 Weight Data Table

		2.4D	2.5TDi	2.5Tdi Auto
3.3.1	MTPLM	3300	3300	3300
3.3.2	Mass in Running Order	2670	2700	2710
3.4.1	Mass of the User Payload	630	600	590
3.4.2	Conventional Load (@75kg per person)	150	150	150
3.4.2	Designated Passenger Seats (plus driver)	2	2	2
3.4.3	Essential habitation equipment	134	134	134
3.4.4	Optional Omni Vent	1.8	1.8	1.8
3.4.4	Overcab bed	20	20	20
3.4.4	Status TV aerial	3	3	3
3.4.4	Remainder for Personal Effects/Options/Accessories	346	316	306
3.5	Gross Train Mass	4500	4500	4500
3.6	MBTM	1200	1200	1200
	Axle Weights			
	Front in Running Order	1231	1276	1286
	Rear in Running Order	1409	1394	1394
3.7.1	MTPLM Front	1570	1570	1570
3.7.1	MTPLM Rear	1800	1800	1800

4.3 Dimensional Data

MODEL	SHERBOURNE
BASE VEHICLE MANUFACTURER	VOLKSWAGEN
BASE VEHICLE MODEL	T4
WHEELBASE	3320
METRIC DIMENSIONS	
LENGTH	6190
WIDTH(MIRRORS EXTENDED)	2420
WIDTH(MIRRORS FOLDED)	2170
HEIGHT	2700
INTERNAL HEIGHT (MAXIMUM)	1920
INTERNAL HEIGHT(MINIMUM)	1850
SINGLE BED (OFFSIDE)	NA
SINGLE BED (NEARSIDE)	NA
DOUBLE BED	1850 x 1230
OVERCAB BED	1770 x 1030
FRESH TANK CAPACITY litres	75
WASTE TANK CAPACITY litres	52

= 20'-4" OR 245"
= 7'- 11¼" OR 95¼"
= 8'- 10½ OR 106½"

APPENDIX A

USEFUL DATA RECORD

1 We suggest that you record key detail in the spaces below should you accidentally mislay you keys or other vital documentation. You should consider removing this page when complete for security reasons.

2	Vehicle Type	.....
2.1	Vehicle Model	.....
2.2	Auto-Sleepers Production Number	.....
3	**Keys**	
3.1	Ignition Key	.....
3.2	Door Key (if applicable)	.....
3.3	Fuel Filler (if applicable)	.....
3.4	Water Filler	.....
3.5	Gas Compartment Key	.....
3.6	Toilet Compartment Key	.....
3.7	Alarm Code (if fitted)	.....
3.8	AA/RAC/etc. Membership Number	.....
3.9	Radio Security Code	.....
4	Supplying Dealer Contact Number	.....

APPENDIX B

AUTO-SLEEPER DEALERS

Don Amott Motor Caravans
Hilton
Derbyshire
DE6 5FJ
Tel: 01283 732193

Marquis Berkshire

The Spinney
Oxford Road
Chieveley, Newbury
Berkshire RG20 8RU
Tel: 01635 248888

Capital Motor Caravans Ltd
Woodside Road
Glenrothes
Fife KY7 4AA
Tel: 01592 759260

Cotswold Motor Caravans
Cheltenham Road East
Churchdown
Glos
GL2 9QL
Tel: 01452 857131

Bowers Leisure Essex
Dunmow Road
Takeley
Essex CM22 6SJ
Tel: 01279 870755

Hayes (Leisure) Ltd
Walsall Road
Darlaston
West Midlands WS10 9SS
Tel: 0121 5263433

Motorhome Ireland
8 Station Road
Saintfield
Northern Ireland
BT24 8TW Tel: 01238 519519

Brownhills Motorcaravan &
Leisure Centre
A1/A46 Junction
Newark
Notts
NG24 2EA
Tel: 01636 704201

Cleveland Motor Homes
Teesside Airport
Darlington
Co Durham DL2 1RH
Tel: 01325 332626/333111

Cranham Motorhomes
Old Gailey Park
Southend Arterial Road
Upminster
Essex RM14 1TJ
Tel: 01277 222555

Hampshire and Dorset Motor Caravans
Iford Bridge, Main A35
Oak Avenue, Christchurch
Dorset BH23 2QA
Tel: 01202 479444

Hayes (Leisure) Limited
Box Road
Bathford Bath
Avon BA1 7QH
Tel: 01225 858290

Perthshire Caravans
Dundee Road
Errol
Perth PH2 7SR
Tel: 01821 670212

Plymouth Motor Caravans Ltd
Lee Mill, Ivy Bridge
Plymouth, Devon
PL21 9EE
Tel: 01752 892977

Ron Reynolds Leisure Vehicles
Otley Road
Bradford
West Yorkshire BD3 0LN
Tel: 01274 630582

Marquis - Surrey
Pantiles Park, London Road,
(A30) Bagshot
Surrey GU19 5HN
Tel: 01276 452111

Stewart Mouland Motor Caravans
South Coast Road (A259)
Peacehaven
Sussex BN10 7ET
Tel: 01273 587229

Bowers Suffolk
Lower Road (A1092)
Glemsford
Nr Sudbury
Suffolk CO10 7QU
Tel: 01787 280263

Todds Mobile Leisure Limited
Coote Lane Lostock Hall
Preston
Lancs PR5 5HS
Tel: 01772 335360

West Country Motorhomes Ltd
Turnpike Road
Lower Weare
Nr Axbridge
Somerset BS26 2JG
Tel: 01934 732503

Robsons of Wolsingham
Wolsingham in Weardale
County Durham
DL13 3HU
Tel: 01388 527242

Simpsons Motor Caravan Centre
Suffolk Road
Great Yarmouth
Norfolk NR31 0LN
Tel: 01493 601696

Spinney Motor Caravans
Caravan Court, Knutsford Road
Cranage, Nr Holmes Chapel
Cheshire CW4 8HJ
Tel: 01477 535808

Strathaven Caravan Centre
Darvel Road
Strathaven
Strathclyde ML10 6QD
Tel: 01357 522444

APPENDIX C

RECOMMENDED ANNUAL SERVICE CHECK FOR MOTOR CARAVAN BODIES AND CONVERSIONS

1 Note: This is an SMMT/NCC publication relating to all types of motorhome. Parts of this, therefore, may not refer to your particular type of vehicle and therefore should be ignored.

2 **INTRODUCTION**

2.1 This entire section offer guidelines for the checking of a motorhome's habitation area and to ensure continual compliance with EN1646-1.

2.2 It does not cover any part of the base vehicle, although there may be minor overlapping (such as tyre pressures, cab seats, internal lights, battery and windows) in a van conversion. The base vehicle must be serviced in accordance with the chassis manufacturer's instructions.

2.3 Reference should also be made to:-

2.3.1 Any owner's manual or equivalent supplied with the vehicle by the motorhome converter.

2.3.2 Appliance manufacturer's instructions.

2.3.3 Driver's handbook or equivalent supplied by the chassis manufacturer.

2.4 A vehicle is accepted for service at the dealer's discretion.

2.5 Any defects, repairs, adjustments, cleaning or lubrication required will be noted on the check list. The customer's approval will be obtained before any work is done.

2.6 Not all of the equipment mentioned in this manual is fitted as standard to every motorhome.

2.7 This guide is published as an aide de memoir for dealers. Any work carried out following the check, and the sufficiency of the work in the check itself, is subject to the contract between the customer and the dealer. The NCC/SMMT and their member companies are not part of this contract, and accept no liability in contract, tort or otherwise, other than death or personal injury due to negligence on their part.

CONTENTS

1 BODY MOUNTING

1.1 Body to Chassis

1.1.1 Examine all fixings retaining the body to the chassis - this may be direct or through a sub-frame. Where practical, all fittings should be checked to ensure there are all present and correctly secured.

1.2 Body to Cab

1.2.1 Examine joint between body and cab for signs of movement and soundness of sealing media.

1.3 Body Retention (dismountables)

1.3.1 Check serviceability and tightness of body retaining gear.

1.3.2 Check serviceability of body support struts and mountings (Note: - whether it will be necessary to demount the body to check the body supports must be agreed between dealer and customer).

2 WINDOWS

2.1 Windows

2.1.1 Check window glazing rubber or sealing for cracks and general condition. Check for satisfactory operation and closing,

2.1.2 Check fixing of top hinge rail on top hung windows.

2.1.3 Check for good weather seal when window is closed and latched.

2.1.4 Check catches and stays for satisfactory operation.

3 DOORS

3.1 External Doors

3.1.1 Not including base vehicle doors.

3.1.2 **Security:**

i. Check that hinges and catches are satisfactory and that, when latched, doors are held securely shut.

ii. Check that the keys or internal latches lock the doors correctly.

iii. Check that any device fitted to hold a door in the open position is satisfactory.

3.1.3 **Sealing:**

i. Check all door seals for cracking and general condition.

ii. Check correct closing to give a weather-tight seal.

3.1.4 **Childproof Lock:**

i. Where a door is fitted with a childproof lock check that an appropriate warning notice is fixed adjacent to the door. Appropriate warning notices are available from motorhome manufacturers.

3.2 Internal Doors

3.2.1 Security:

i. Check that hinges and catches are satisfactory and that, when latched, the door is held securely shut.

3.2.2 Safety:

i. Check that any device fitted to hold a door in the closed position can be operated from both sides to open the door in an emergency.

4 ATTACHMENTS TO CHASSIS OR UNDERBODY

4.1 Corner Steadies

4.1.1 Check that attachments to chassis are secure.

4.1.2 Ensure steadies work freely and satisfactorily.

4.1.3 Lubricate screw to ensure correct operation.

4.2 Folding/Retractable Steps

4.2.1 Check that step pivots are satisfactory and not worn. Check that, when closed, the retaining mechanism holds the step securely. If fitted, check device is working.

4.3 Underfloor Water Tank Mountings

4.3.1 Check mounting frames are secure to body. Any fastenings that require releasing to remove the tank should be free of rust and operate freely. (Removal, flushing, cleaning and replacing of tanks will be carried out at the prior request of the customer or will be done subsequently with other work).

4.4 Spare Wheel

4.4.1 Remove spare wheel. Check for damage. Check tyre pressure.

4.4.2 Check mounting frame for security to body and for secure retention of spare wheel.

4.5 Wheelboxes

4.5.1 Check for damage, corrosion, water seepage, signs of tyre rubbing.

5 ATTACHMENTS TO BODY EXTERIOR

5.1 Roof Lights

5.1.1 Check security, general condition, and that sealing has not deteriorated.

5.2 Roof Racks and Ladders

5.2.1 Check security to body and general condition.

5.2.2 Check roof for damage adjacent to rack.

5.3 Mouldings, Trims

5.3.1 Check security. Check sealing has not deteriorated (see section 6.1).

5.4 Flue Terminals, Air Vents

5.4.1 Check security. Check sealing has not deteriorated.

5.4.2 Check that these are not blocked.

6 INTERNAL

6.1 Body Seepage Check

6.1.1 Examine for moisture/water staining of areas under windows, at side of roof and at corners which could indicate water seepage problems. A moisture meter should be used where appropriate.

6.2 Furniture

6.2.1 Check furniture is securely fixed.

6.2.2 Check door hinges, catches and stays for satisfactory operation.

6.3 Dinette Seats/Beds

6.3.1 Check seat bases for security of fixings and for damage.

6.3.2 Make up beds according to manufacturer's instructions and check for rigidity and safety.

6.4 Upper Bunks

6.4.1 Check there is a secure means of access to upper bunks and that, where applicable, protection against falling out and entrapment is provided.

6.5 Curtains/Blinds/Nets

6.5.1 Check track is secure and curtains draw freely without snagging.

6.5.2 Check blinds and/or nets for correct operation.

6.5.3 Check flyscreens in roof lights and air vents.

6.6 Cab Seats

6.6.1 Where cab seats form part of the living area and/or bed layout they should be checked for security of attachment, smooth and easy operation of seat slides, swivels and seat back operation.

6.7 Fire Extinguisher

6.7.1 Check condition and expiry date. If an extinguisher is not fitted, inform the customer of the advisability of such equipment.

6.8 Fire Blanket

6.8.1 Check position (should be near cooker).

6.8.2 If one is not present, inform the customer of the advisability of such equipment.

6.9 Advice to Occupiers/Warning Notice

6.9.1 Check presence and condition and advise customers accordingly.

The wording and the layout of the notice should be set at as follows:

ADVICE TO USERS

VENTILATION
Do not obstruct the ventilators which are fitted; your safety depends on them.

IN CASE OF FIRE
1. Get everyone out.
2. Turn off outside gas valve and/or oil valve (if fitted).
3. Disconnect the mains electricity supply.
4. Raise the alarm and call the fire brigade.
5. Tackle fire if safe to do so.

FIRE PRECAUTIONS
Children:- Do not leave them alone.

Means of Escape:- Make sure you know the location and operation of the emergency exits, keep all escape routes clear.

Combustible Materials:- Keep them clear of all heating and cooking appliances.

Fire Fighting:- Provide, at least, a 1 kg powder fire extinguisher, that complies with BS5423 by the main exit door, and a fire blanket next to the cooker. Make yourself familiar with the instructions on your fire extinguisher and the fire precaution arrangements on the caravan park.

6.10 Portable or Open Flame Heating Equipment

6.10.1 Check for its presence. The customer must be advised against its use.

7. ELEVATING ROOFS

7.1 Lifting Mechanism

7.1.1 Gas struts or spring struts should be checked for corrosion (particularly on the piston rods of gas struts), smooth operation when operating roof up and down and to ensure that they support the roof when fully up. Check attachment points of struts to body and roof.

7.2 Canvas Side Walls

7.2.1 Check for satisfactory attachment to body and roof.

7.2.2 Check for splits or holes, particularly at fold lines.

7.2.3 Check that the canvas stowed satisfactorily when roof is lowered.
(A waterproofing check will be done at the prior request of the customer).

7.3 Solid Side Wall

7.3.1 Check sides and end panels fold up and down correctly, that they seal against each other where appropriate and that retaining mechanisms are satisfactory. Check all hinges for security and freedom from strain.

7.4 Locking of Roof

7.4.1 It is important to ensure that, when the roof is in the travelling position, it is safely and positively locked down. Any locking retaining mechanism should be carefully examined.

8. GAS SYSTEMS

8.1 Cylinders and Regulators

8.1.1 Establish that the cylinders and regulators are compatible.

8.1.2 Butane (blue) cylinders should have a regulator stamped with the pressure 11" WG (28 mbar) and propane (red) cylinders should be stamped 14" WG (37 mbar).

8.1.3 Check that the regulator is controlling the gas to the correct pressure for the type of cylinder fitted.

8.1.4 Check cylinder compartment vents and gas drop hole in floor are free from obstruction.

8.1.5 Check seals on internal doors.

8.2 Hose and Piping

8.2.1 Check any flexible hose is of an approved type. Check its condition and any evidence of cracking.

8.2.2 Check piping for condition, damage and correct support.

8.2.3 Carry out an overall leak test.

8.3 Appliances

8.3.1 In general, the checking of gas appliances can be divided into the following:

1. Cleaning
2. Operation of controls
3. Correct flame structure
4. Flues
5. Flame failure device
6. Security

8.3.2 Cleaning

i. Where appropriate, remove cover(s) to gain access to heat exchanger. Clean away any fluff or foreign matter. Reassemble and test. Clean flame viewing window.

8.3.3 Controls

i. Check that all knobs etc. work smoothly and are secure on their spindles. If gas taps require greasing to ease stiffness, use only approved LPG grease. Check that appliances can be brought into service using the normal controls.

8.3.4 Correct Flame Structure

i. Check that all pilot flames burn quietly and clearly.

8.3.5 Instantaneous Water Heating: The main burner flame should be of even height and blue in colour. A flame burning yellow will allow sooting to occur.

8.3.6 Ovens: The oven flame should burn quietly and be of even height, mainly blue/green in colour. If the gas is propane, the flame will normally develop yellow tips as the burner heats up. If the gas is butane, a small amount of yellow tipping will be seen immediately after lighting, increasing as the burner heats up.

8.3.7 Grill Burners: It is normal for the flames on this type of burner to develop yellow tips as it heats up, particularly on butane.

8.3.8 General: A flame lifting away from the burners is an indication of too high a pressure, although it may happen with grill burners whilst the frets are heating up. A yellow flame will cause sooting and is an indication of too low a pressure. Providing the regulator and piping have been checked and found satisfactory, the above faults should not appear.

8.3.9 Flues:

i. Flues should be examined for security of fixing and for correct attachment to appliances and flue terminals. They should be free from damage and corrosion. Check for leakage of flue gases into the vehicle.

8.3.10 Flame Failure Device (FFD):

i. Where fitted, FFD should be checked to ensure satisfactory operation. After the appliance has been successfully checked, allow time for the thermocouple to cool. Attempt to relight the appliance by turning it on without pushing in the gas control knob. (Do not override the FFD). If appliance does not light, FFD is satisfactory.

8.3.11 Security:

i. Check appliance is securely fixed to the vehicle/furniture and will be free form rattles. Where applicable, check that water pipes are satisfactorily attached with no sign of leakage.

8.3.12 Protection of adjacent surfaces:

i. Check that surfaces adjacent to open flame cooking appliance have adequate protection.

8.3.13 Inspections:

i. It is recommended that inspections are carried out by a qualified fitter trained to, for example, CORGI (Confederation of Registered Gas Installers) or Calor standards.

9 WATER SYSTEM

Before operating the water system, a visual check of the following items may show up an obvious leak source.

9.1 Fresh Water Tank/Container

9.1.1 Check condition, fill tank and check for leaks.

9.1.2 Check the external filter and filter pipe to tank.

9.1.3 Check for satisfactory venting.

9.1.4 Check condition and presence of filter cap.

9.2 Waste Water Tank

9.2.1 Check drain tap is clear and working.

9.2.2 Check condition and presence of drain hose. (The water tank will be drained, flushed, cleaned and charged with a measure of toilet fluid/disinfectant at the prior request of the customer).

9.3 Filter Pump

9.3.1 When applicable, remove filter and replace.

9.3.2 Check the in-line pump for security and condition. Remove the submersible pump from tank, check condition.

9.3.3 Check pump inlet and outlet are clear and not obstructed.

9.3.4 Check delivery hose and electric cable are secure and satisfactory.

9.4 System Check

9.4.1 Operate pump. Check all piping for leaks.

9.4.2 Operate taps and shower. If a hot water system is fitted, it can be checked for leaks etc., using cold water. (Note:- Aerated water from tap could be due to a leak on the suction side of the pump).

9.5 Waste Water System

9.5.1 With water running through the drain pipes, check for leaks and satisfactory draining of water from sinks etc.

9.6 Couplings and Fluids

9.6.1 Check that the appropriate markings are used - blue for fresh water, grey for waste water. Ensure a sealing off cover is supplied for each coupling.

9.6.2 Check that filler positions are designated "petrol", "diesel" or "water" as appropriate.

9.7 Toilet Waste Tank.

9.7.1 Check that any fixed tank intended to receive discharge from a toilet is fitted with either a level or full indicator

10 ELECTRICAL SYSTEMS

10.1 Extra Low Voltage 12 Volts (Excluding Vehicle)

10.1.1 Battery/ies:

i. Check battery/ies for condition.

ii. Check connections, wires, fuses and relays appertaining to the habitation electrics.

10.1.2 Wiring:

i. Examine all visible wiring.

ii. Check all connections and joints are sound and satisfactory.

10.1.3 Fuses/Fuse Holders:

i. Ensure that fuses and fuse holders used to protect the habitation electrics are satisfactory and that fuse ratings are compatible with the circuit appliances being protected.

10.1.4 Appliances:

i. Inspect all appliances for damage, signs of overheating and secure fixing. Function test all appliances.

10.2 Mains 230 Volt System

10.2.1 It is recommended that the inspection and certification of the 230 volt system be carried out by a qualified electrician who is an approved contractor of the NICEIC (National Inspection for Electrical Installation Contracting) or in membership of the Electrical Contractors Association 16th Edition Wiring Regulations.

11 VENTILATION

11.1 High Level

11.1.1 Check all high level ventilators, including roof lights, are free from obstruction and allow a free flow of air.

11.2 Low Level

11.2.1 Check all low level ventilators are free from obstructions and allow a free flow of air. If the ventilator is manually adjustable then ensure the mechanism is free and operating correctly.

MOTOR CARAVAN ANNUAL HABITATION SERVICE CHECK

CHECK SHEET **CUSTOMER COPY**

Vehicle Reg. Mark	
Make & Model	
Year of Manufacture	
Recorded Mileage	

A Class
Coachbuilt
High top conversion
Elevating Roof
Dismountable

CHECK ITEM	Manual	OK	Remarks - Advice to Customers
SECTION 1: BODY MOUNTING	-	-	
BODY TO CHASSIS	1.1		
BODY TO CAB	1.2		
BODY RETENTION	1.3		
SECTION 2: WINDOWS	-	-	
WINDOWS	2.1		
SECTION 3: DOORS	-	-	
EXTERNAL	3.1		
INTERNAL	3.2		
SECTION 4: CHASSIS	-	-	
CORNER STEADIES	4.1		
FOLDING STEP	4.2		
WATER TANK MOUNTS	4.3		
SPARE WHEEL	4.4		
WHEEL BOXES	4.5		
SECTION 5: BODY EXTERIOR	-	-	
ROOF LIGHTS	5.1		
ROOF RACK AND LADDER	5.2		
MOULDINGS AND TRIM	5.3		
FLUE TERMINALS, AIR VENTS	5.4		
SECTION 6: INTERNAL	-	-	
SEEPAGE CHECK	6.1		
FURNITURE	6.2		
DINETTE SEATS/BEDS	6.3		
CURTAINS, BLINDS, NETS	6.5		
CAB SEATS	6.6		
FIRE EXTINGUISHER	6.7		
FIRE BLANKET	6.8		
WARNING NOTICE	6.9		
HEATING EQUIPMENT	6.10		

CHECK ITEM	Manual	OK	Remarks - Advice to Customers
SECTION 7: LIFT UP ROOFS	-	-	
LIFTING MECHANISM	7.1		
CANVAS SIDE WALLS	7.2		
SOLID SIDE WALLS	7.3		
LOCKING	7.4		
SECTION 8: GAS SYSTEM	-	-	
CYLINDERS & REGULATOR	8.1		
HOSE & PIPING	8.2		
APPLIANCES	8.2		
SECTION 9: WATER SYSTEM	-	-	
FRESH WATER TANK	9.1		
WASTE WATER TANK	9.2		
FILTER PUMP	9.3		
SYSTEM CHECK	9.4		
WASTE WATER SYSTEM	9.5		
COUPLINGS & FLUIDS	9.6		
SECTION 10: ELECTRICS	-	-	
12 VOLT SYSTEM	10.1		
BATTERIES	10.1.1		
WIRING	10.1.2		
FUSES, FUSE HOLDERS	10.1.3		
APPLIANCES	10.1.4		
MAINS 230 VOLT SYSTEM	10.2		
SECTION 11: VENTILATION	-	-	
HIGH LEVEL	11.1		
LOW LEVEL	11.2		

DEALER:	SIGNED: DATE:

DEALER STAMP DATE / /	DEALER STAMP DATE: / /
DEALER STAMP DATE: / /	DEALER STAMP DATE: / /
DEALER STAMP DATE: / /	DEALER STAMP DATE: / /
DEALER STAMP DATE: / /	DEALER STAMP DATE: / /
DEALER STAMP DATE: / /	DEALER STAMP DATE: / /
DEALER STAMP DATE: / /	DEALER STAMP DATE: / /

APPENDIX D

WARRANTY

1 Should you misplace your warranty certificate its contents are re-produced below for reference.

1.1 AUTO-SLEEPERS LIMITED (hereinafter called "the Company") hereby guarantee the body conversion of the motorhome details of which are specified above against failure or defect arising through defects in workmanship or material under normal use and service for a period of one year from the date the same was purchased.

1.2 Subject to the limitations and conditions specified, the Company, will during the said period, repair or replace free of charge any defects which arise in the body conversion of the said motorhome and which is found on the Company's inspection to result solely from faulty design, workmanship or materials. It is a condition of this Warranty that the said motorhome is delivered to an authorised dealer or distributor of the Company or the Company's factory for any such repair (at the Company's discretion) and afterwards collected therefrom both at the sole expense of the Purchaser.

1.3 Conditions

1.3.1 The benefit of this Warranty shall apply only to the Purchaser named herein and shall not be transferable and shall also apply to motorhome which are the subject of hire purchase or credit sale agreements.

1.3.2 This Warranty does not extend to faults attributable solely to wear and tear or to defects repaired by or on the instructions of the Purchaser without first obtaining the Company's written authorisation. Faults attributable to willful damage, negligence, abnormal conditions and failure to follow the Company's instructions (whether oral or in writing), misuse or alteration are excluded.

1.3.3 This Warranty does not apply to a motorhome which has been subject to overloading or otherwise misused or has not been maintained in accordance with the Company's recommendations contained in the handbook.

1.3.4 This Warranty applies only to the body conversion and does not cover any failure or defect in the chassis or engine of the vehicle or any other part of the vehicle not manufactured by the Company although supplied by the Company or to any item on the vehicle which has its own separate Warranty or Guarantee from the Manufacturers of such item.

1.3.5 Where under the terms of this Warranty a replacement part is supplied the conditions of the Warranty shall apply to such part for the unexpired portion of the original Warranty period covering the defective part.

1.3.6 It is a condition of this Warranty that the Purchaser shall give to an authorised dealer or distributor of the Company notice in writing of the model, type, chassis number and date of purchase of the vehicle within 14 days of the discovery of the alleged defect and the vehicle or defective part being returned at the expense of the Purchaser as indicated above.

1.3.7 Any disagreement between the Company and the Purchaser as to the interpretation of this Warranty shall be referred for determination to a single Arbitrator to be appointed by agreement and in the event of no agreement being reached by the Society of Motor Manufacturers and Traders.

1.3.8 This Warranty is valid only in the United Kingdom and the Company's distributors, dealers or agents have no authority to vary the terms hereof.

1.3.9 This Warranty becomes valid only when the tear-off registration card has been received by the Company duly completed and posted within 14 days of the purchase.

1.3.10 The Purchaser's attention is drawn to the Motor Manufacturers Warranty which coves the chassis engine of the said vehicle.

1.3.11 The Purchaser's attention is also drawn to the fact that these conditions do not affect the Purchaser's statutory rights.

AUTO-SLEEPERS LIMITED

Orchard Works, Willersey, Near Broadway, Worcs. WR12 7QF